NOVA® 15i, NOVA 27i, and NOVA 38i; Three-phase, microprocessor-controlled reclosers (S280-43)

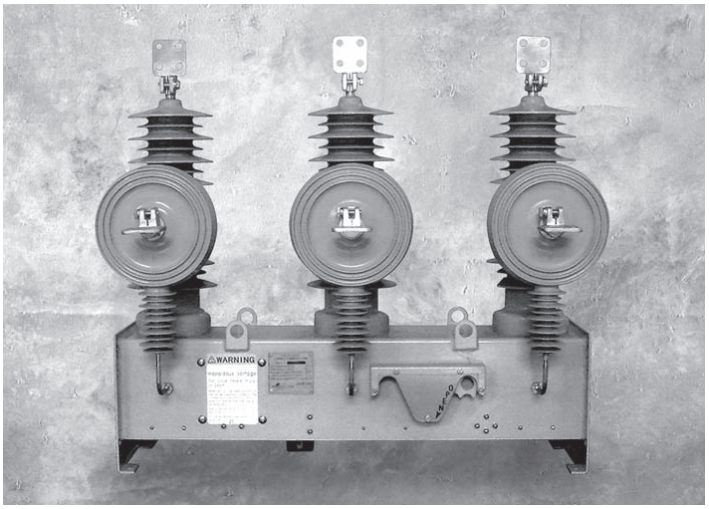

Figure 1.

NOVA i vacuum-interrupting, three-phase, microprocessor-controlled automatic circuit recloser. (Shown with 4-hole flat-pad terminal accessory.)

Description

The NOVA® i three-phase, microprocessor controlled, vacuum-interrupting automatic circuit reclosers provide advanced system protection, metering, and data acquisition with full integration and automation functionality for distribution circuits rated through 38.0 kV.

The NOVA i recloser combines solid cycloaliphatic-epoxy polymerencapsulated vacuum interrupters with a reliable, lightweight operating mechanism that utilizes a magnetic actuator to provide a lifetime of trouble-free operation. The solid polymer system does not rely on a gaseous, liquid, or foam dielectric. The NOVA i recloser is highly resistant to ozone, oxygen, moisture, contamination, and ultraviolet light.

Designed and tested to be compatible with the Cooper Power Systems Form 6/FXD recloser control, these automatic circuit reclosers offer superior coordination, protection, and application capabilities.

Recloser operations are programmed in an electronic control with accurate characteristics and a host of advanced features. Precise operating tolerances enable close coordination with other protective devices on the system. When system requirements change, program settings are easily altered with no sacrifice of accuracy or consistency.

Compact and lightweight, NOVA i reclosers are easily installed on poles or in substations. Mounting equipment is available for both pole and substation applications. Recloser and control accessories enable further tailoring of the protective program to achieve maximum system operating flexibility.

Cooper Power Systems is strongly committed to improving the reliability of the electric power industry. Technological advances, including the newest microprocessor-based controls and solid insulation NOVA i distribution switchgear products, represent our investment in the future.

The NOVA i recloser is not only a technological breakthrough, but a valuable component that brings significant operational savings to the utility business unit, lowering the installation, operation, training, and maintenance costs on your power distribution system.

When needed, application expertise, backed by world-wide systems engineering knowledge and experience, is available. Customerfocused design capability, based on more than 65 years of recloser experience, has made Cooper Power Systems an industry leader.

NOVA i reclosers are designed and manufactured in accordance with IEC 62271-111 2005 and IEEE Standard C37.60-2012 ™.

ISO 9001:2000 Certified Quality Management System.

Ratings and characteristic features

Three-phase protection on systems rated 2.4 through 15.5 kV is provided by NOVA 15i reclosers. NOVA 27i reclosers can be applied on systems rated through 27 kV. Higher-voltage system protection at 38 kV is provided by NOVA 38i reclosers. A ratings summary for Type NOVA i reclosers is shown in Tables 1–3. For ratings and basic application information on other Cooper Power Systems reclosers, see Catalog Section 280-05.

Operation

Each recloser includes integrated Cooper Power Systems designed current transformers for accurate secondary current input to the Cooper Form 6/FXD recloser control. Due to a single CT ratio for all ratings, minimum-trip values of the electronic control are independent of the continuous-current and interrupting ratings of the recloser. Tripping and closing signals from the control energize the operating circuits in the recloser.

Exceptional flexibility in coordination with other protective devices is provided by 35 resident time–current curves that can be customized by the user for precise system coordination. System coordination includes a wide array of minimum trip values, reclosing and resetting time settings, and a selection of accessories.

Vacuum interruption

A single break on each phase is accomplished by separating contacts inside the vacuum interrupter. All arcing is contained within the vacuum envelope. The axial-magnetic vacuum interrupters used in NOVA i reclosers offer extended and increased duty cycles compared with oil or radial-magnetic interrupters. The axial-magnetic field keeps the arc in a diffused mode, resulting in less arc power to be dissipated, resulting in low thermal stress, suitable for encapsulation.

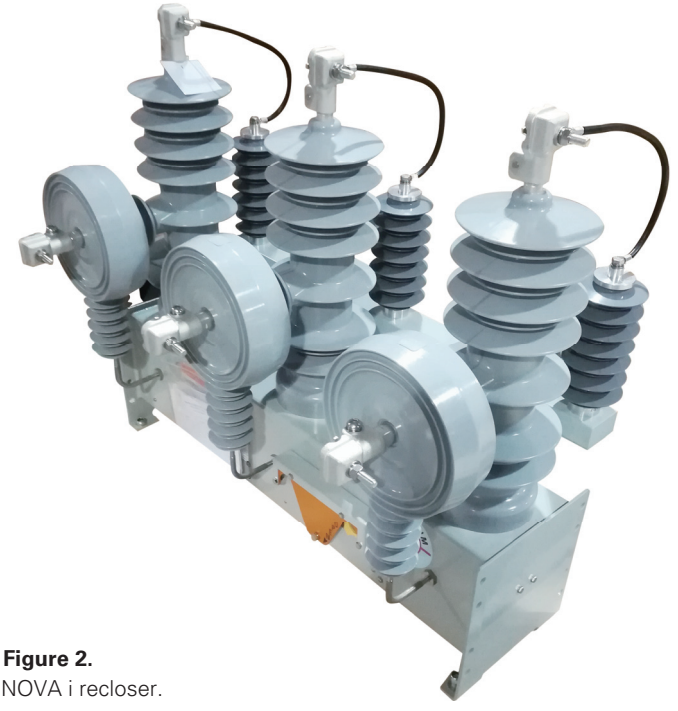

Figure 2.
NOVA i recloser.

Surge protection

Best operating results are achieved if reclosers are protected with surge arresters. For line applications, arrester protection is recommended on both sides of the recloser. (If protection is on one side only, it should be on the source side. In substations, arresters should be on the load side.) Cooper Power Systems distribution-class arresters provide excellent protection and are available with mounting brackets to fit Cooper reclosers (see Catalog Section 235).

Ordering information

All NOVA i reclosers include a Form 6/FXD microprocessor-based recloser control. The Form 6/FXD control includes full protection, TCC Editor™, metering, and diagnostics for your application needs.

To order a NOVA i recloser, electronic control, and control cable:

1. See the **Constructing a Catalog Number** section to construct a catalog number that describes the required recloser.
2. From Tables 5–9, specify the catalog numbers that describe the required recloser accessories.

Features and detailed description

NOVA i microprocessor-controlled, three-phase reclosers protect systems operating through 38 kV (see **Ratings and Specifications** section of this catalog). These ratings and the wide range of programmable settings provided by the Cooper Power Systems Form 6/FXD control meet a variety of application requirements.

Recloser operation

Fault currents are sensed by three 1000:1 ratio sensing current transformers. These CTs provide a continuous measurement of line current, monitored by the microprocessor control. When current level exceeds the programmed minimum trip level, the magnitude of the overcurrent is integrated with time, using a programmed time–current curve characteristic. The control then signals the trip in the recloser, opening the main contacts of all three phases.

The control signals tripping and closing. The recloser always maintains energy for a tripping operation following a closing operation.

The electronic recloser control provides determination of phase- and ground-trip sequences and operations to lockout and reclosing and resetting timing, adjustable with the control, without de-energizing the recloser.

Construction

Recloser

Designed for long service life and no maintenance, the NOVA i recloser has three solid-polymer interrupter modules, current transformers, and a magnetic actuator mechanism; light gray is the standard color.

Cycloaliphatic-epoxy polymer encapsulation provides solid insulation and maintenance-free, environmentally safe operation. There is no monitoring or maintaining of gas pressure or oil levels; there are no toxic or environmentally unfriendly materials. There are no foam fillers or insulation seals, eliminating potential moisture ingress areas. The NOVA i recloser module exhibits excellent absorption of elastic energy and resistance to cracking and crack propagation. Additionally, durable environmental properties make the solid polymer suitable for outdoor applications, including seacoasts, deserts, and areas of high pollution.

Surface tracking

The cycloaliphatic epoxy is highly resistant to contaminants and resists tracking and flashovers under extreme pollution levels to reduce both flashovers and the associated cost of repairs.

Hydrophobicity

The module maintains excellent hydrophobicity, a property characterized by water beading into isolated drops, and is highly resistant to moisture absorption. Hydrophobicity prevents continuous sheets of water from forming leakage current paths that deteriorate the creepage withstand level.

Ultraviolet resistance

The cycloaliphatic epoxy resists ultraviolet radiation damage even in harsh climates, maintaining a smooth, unblemished, selfcleansing surface with lowadhesion to contaminants.

Tensile strength

Outstanding tensile and flexural strength characteristics mean the NOVA i recloser modules are tough and non-fragmenting, reducing shipment and handling charges.

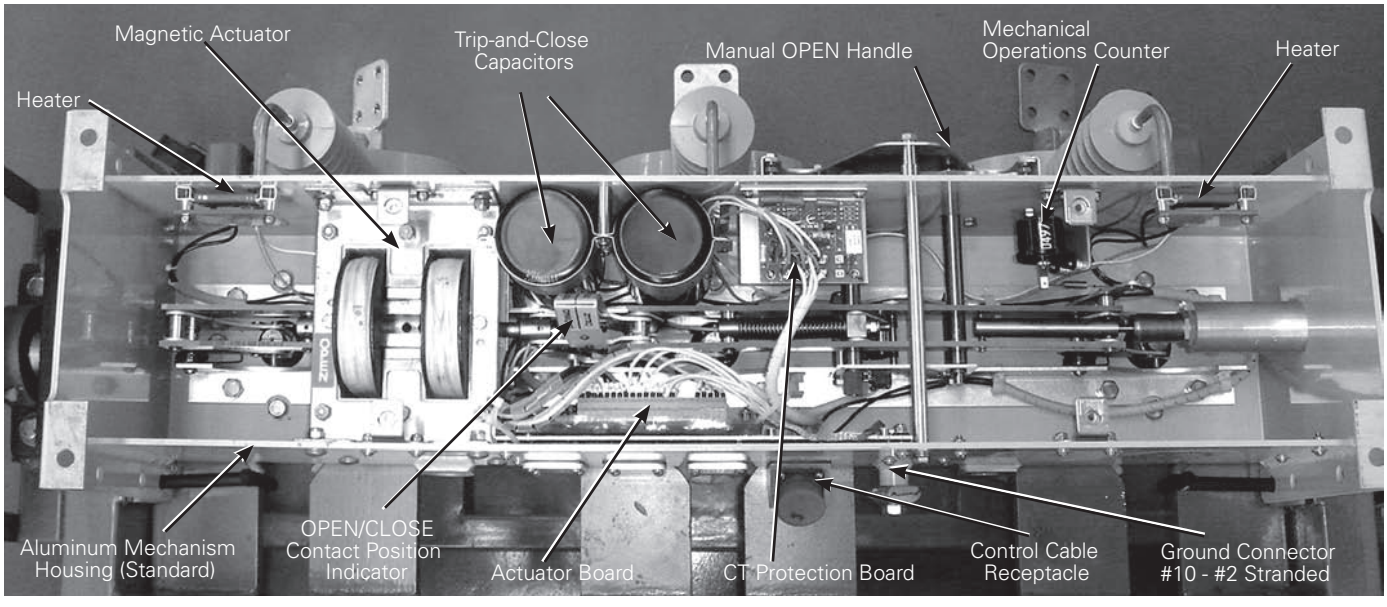

Figure 3.
NOVA i recloser mechanism with control-powered interface (view from bottom of recloser with bottom cover removed).

Shed design

The shed design utilizes alternatesized skirts. The major sheds shield and protect the minor sheds to enhance the hydrophobicity and ultraviolet resistance of the module, eliminate formation of microcracks, and ensure extraprotected creepage. Additionally, sharp edges direct water away from the unit. Water paths and ice formations are effectively eliminated.

Flashover recovery

Flashovers occur when an object, usually wildlife, contacts energized parts of the equipment. The NOVA i recloser minimizes the effect of flashovers with remarkable physical resilience, arc-quenching properties, and a self-healing ability. The NOVA i recloser can withstand the enormous forces experienced during faults without wholesale damage and allows re-energizing after external flashover without cleaning. Cooper Power Systems also offers wildlife guards to minimize flashovers.

Vacuum interrupters

NOVA i reclosers use vacuum as the interrupting medium. Vacuum interrupters provide fast, low-energy arc interruption with long contact and interrupter life, low mechanical stress, and maximum operating safety. With arc interruption taking place in a vacuum, contact and interrupter life are several times greater than with interruption in oil, virtually eliminating interrupter maintenance.

Vacuum interrupters are designed with a metal and ceramic housing for maximum strength and long-term vacuum integrity. Enclosed in the interrupter are a stationary and a moving contact assembly.

Electronic control

NOVA 15i, NOVA 27i, and NOVA 38i reclosers are integrated with Cooper Power Systems' Form 6/FXD electronic recloser control as a total system to provide a complete reliability solution for distribution systems.

Control-powered interface

The NOVA i recloser and (see Figure 4) Form 6/FXD microprocessorbased control provides complete open-close sequences without ac power. The control-powered interface includes a 19-pin receptacle on the recloser and an internal heater (for humidity control) powered from the control input power supply (ac or dc). The dc-to-dc converter board converts the control's 24 V dc battery supply to 53 V dc to charge the trip/close capacitors in the NOVA i recloser mechanism.

The dc-to-dc converter board also houses voltage monitoring and conditioning circuits that protect the battery from failure and provide trip/ close operations without ac power.

Manual operation

The recloser can be opened manually with a hotstick to pull down the yellow manual OPEN handle under the sleet hood. With the handle in the OPEN position, the control cannot close the recloser. The yellow handle, when pulled in a downward motion, will remain in the down position, providing visible indication that the unit is open and disabled from any closing.

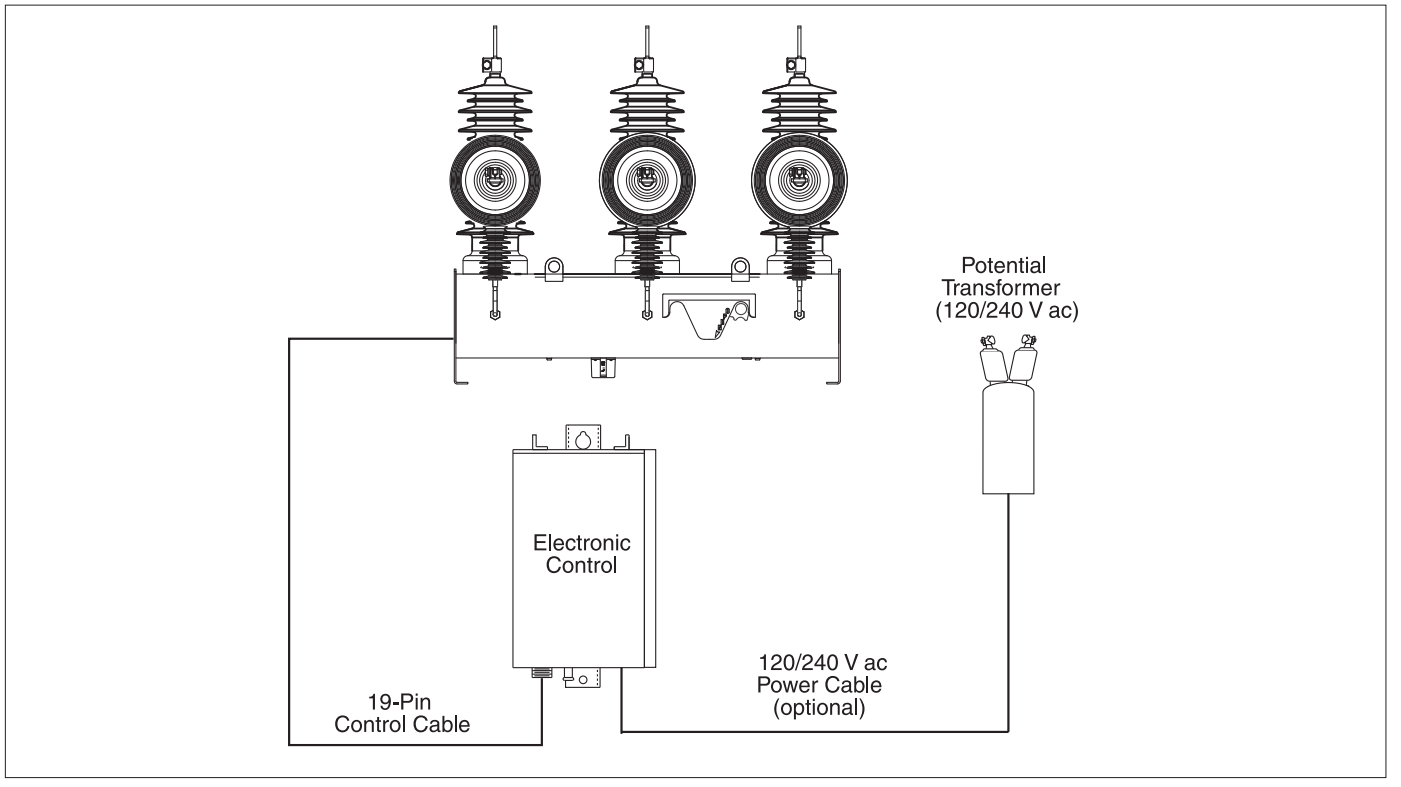

Figure 4.
Control-powered NOVA i recloser configuration with potential transformer input power.

The recloser is closed, following a manual open, by pushing the yellow handle back under the sleet hood and then using the microprocessor control to close the recloser.

Similarly, the recloser can be closed from the close button on the Form 6/FXD control panel, provided the manual operating handle is up. A red contact position indicator flag, adjacent to the manual operating handle, shows the recloser's contact position.

Voltage sensing option

3 Internal voltage sensor in source side busing of recloser

The internal voltage sensor is located internal to the NOVA i module and connected to the horizontal bushing. The internal voltage sensor is used to provide low voltage input to the Form 6/FXD recloser control for metering and/or protective functionality.

The sensing option, cable, and control support a magnitude accuracy of 2% or better and a phase degree accuracy of ±1.5° throughout the temperature range of -40°C to +65°C.

3 Integrated voltage sensor in load side bushing of recloser

The NOVAi recloser is available with additional 3 integrated voltage sensors in load side to support voltage sensing from both source side and load side at time of order. Using a high-voltage resistor with outdoor bushing, the sensing option, cable, and control support a magnitude accuracy of 2% or better and a phase degree accuracy of ±1.5° throughout the temperature range of -40°C to +65°C.

Accessories

Auxiliary switch

A three-stage auxiliary switch can be provided as an accessory. Each stage has two independent contacts that permit any desired combination of "a" (follow state of recloser contacts) and "b" (opposite recloser contacts) positions. The switch contacts are insulated for 600 V and have a continuous current rating of 10 A. Their interrupting ratings are shown in Table 4.

Terminals

The standard is a 2-hole, flat-pad (630 A) terminal. An eyebolt

1/0-500 mcm (630 A), eyebolt 4/0-1000 mcm (800 A), and 4-hole (800 A), flat-pad terminals are available as an accessory.

The eyebolt and flat-pad terminals are made of copper alloys. Cooper Power Systems recommends terminal connection to copper wires to optimize the electrical connection. Aluminum cables may produce aluminum oxide sufficient to compromise the electrical connections.

Anti-oxide coatings for temporary protection of wire-brushed aluminum cable connections to flat-pad terminals must be maintained at intervals determined by the customer based on load current, climate, and other installation conditions.

Eyebolt terminals are recommended for copper conductors only.

Pole-mounting hanger

A pole-mounting hanger, which bolts directly to the recloser frame, is available for polemounting installation.

Arrester-mounting brackets

The arrester-mounting bracket accessory can be bolted to the recloser frame and polemounting hanger for the addition of inboard and outboard arresters. The arresters are not included with the brackets.

Substation-mounting frame

A substation-mounting frame accessory is available for substation-mounting applications.

Ratings and specifications

Check recloser ratings prior to installation

The recloser must be applied within its specified ratings. Check nameplate ratings and compare with the system characteristics at the point of application prior to installation. Tables 1, 2, 3, and 4 list the ratings and specifications for the NOVA i recloser.

Table 1
Voltage ratings (kV)

Description	15 kV	27 kV	38 kV
Rated basic impulse level (BIL)	15.5 kV	27 kV	38.0 kV
Radio noise limit (µv)	110.0 kV	125.0 kV*	170.0 kV
Power frequency withstand, dry	100 @ 9.4 kV	100 @ 16.4 kV	100 @ 23.0 kV
Power frequency withstand, wet	50 kV	60 kV	70 kV
	45 kV	50 kV	60 kV

*150kV option available.

Table 2
Current ratings (A)

Description	15 kV	27 kV	38 kV
Short circuit current,	630 A*	630 A*	630 A*
Symmetrical making current,	12.5 kA**	12.5 kA**	12.5 kA
Asymmetrical peak making current,	31.0 kA	31.0 kA	31.0 kA
Asymmetrical RMS	20.0 kA	20.0 kA	20.0 kA

*800 A option available.
** 16.0 kA option available.

Table 3
Mechanical ratings

Description	15 kV	27 kV	38 kV
Min. mechanical/electrical operations			
Without maintenance (C-O)	10,000	10,000	10,000
Mass (Weight) - kg (lbs.)	110 (242)	115 (253)	125 (275)

Table 4.1
Duty cycle for nova15i and nova27i

Type	Percentage of interrupting rating	Number of unit operations	Minimum circuit X/R Value
	15-20	44	4
NOVA15i	45-55	56	8
NOVA27i	90-100	16	17
		Total 116	

Table 4.2
Duty cycle for nova38i

Type	Percentage of interrupting rating	Number of unit operations	Minimum circuit X/R Value
	15-20	88	4
NOVA38i	45-55	112	8
	90-100	32	17
		Total 232	

*Compliant with IEC 62271-111 2005.

*Compliant with IEEE Standard C37.60-2012 ™.

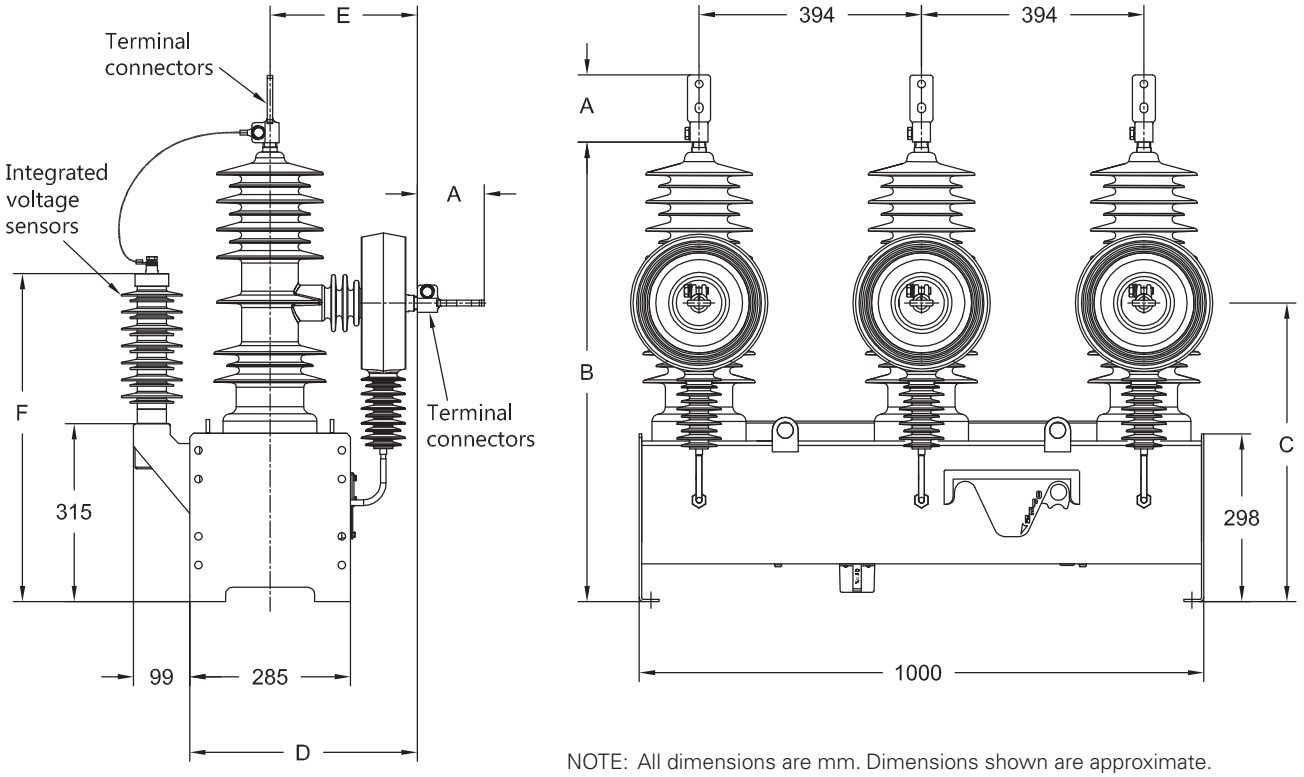

Figure 5.
NOVA i three-phase recloser dimensions.

Terminal options	A
Eyebolt, 1/0-500 mcm Cable range (630 A max.)	89
Eyebolt, 4/0 - 1000 mcm Cable range (800 A max.)	111
Flat pad, 2-hole (630 A max.)	119
Flat pad, 4-hole (800 A max.)	121

	B	C	D	E	F
NOVA 15i	809	528	400.5	285	573
NOVA 27i	908	627	400.5	285	663
NOVA 38i	1007	676	441.1	298.6	723

Creepage distances

	Description	Creepage distance (mm)	Creep (mm/kV)
NOVA 15i	Terminal to terminal	1180	79
	Lower terminal to ground/earth	671	45
NOVA 27i	Terminal to terminal	1473	55
	Lower terminal to ground/earth	951	35
NOVA 38i	Terminal to terminal	1763	46
	Lower terminal to ground/earth	1215	32

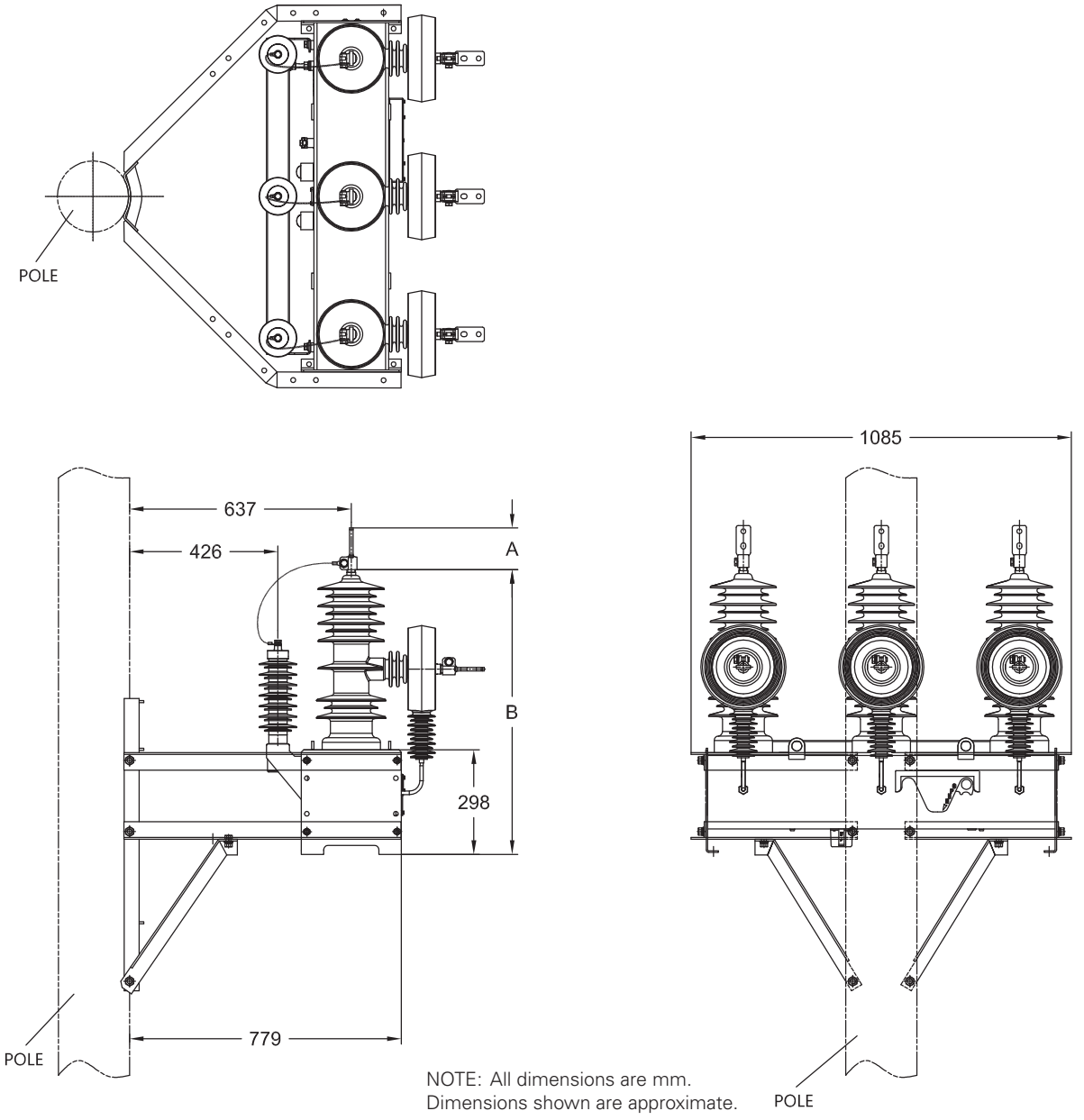

Figure 6.
Dimensions of NOVA i recloser with pole-mounting hanger accessory (NOVA 15i shown).

Terminal options	A
Eyebolt, 1/0 - 500 mcm Cable range (630 A maximum)	89
Eyebolt, 4/0 - 1000 mcm Cable range (800 A maximum)	111
Flat pad, 2-hole (630 A maximum)	119
Flat pad, 4-hole (800 A maximum)	121

	Dimension B
NOVA 15i 110 kV BIL	809
NOVA 27i 150 kV BIL	908
NOVA 38i 170 kV BIL	1007

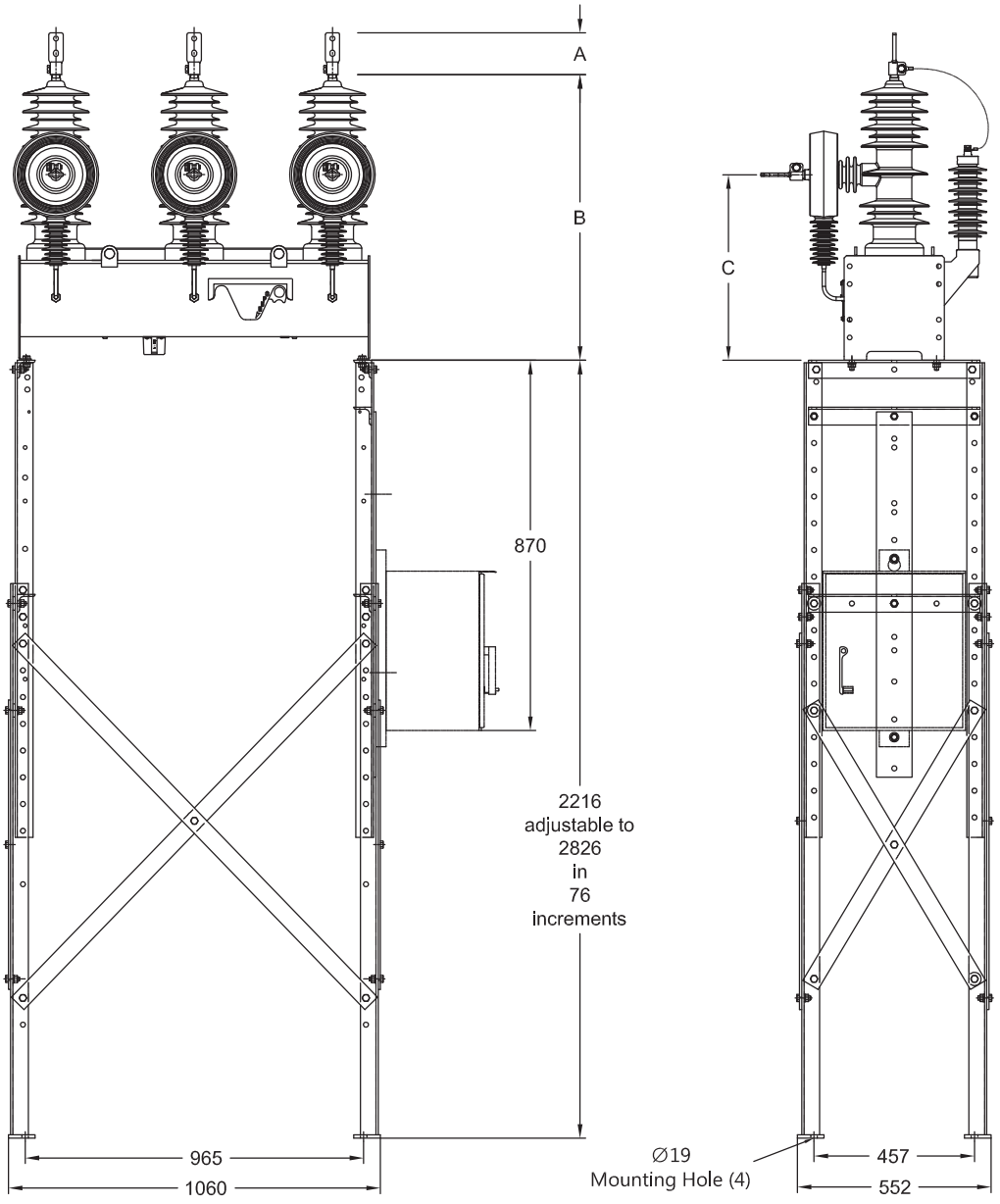

NOTE: All dimensions are mm. Dimensions shown are approximate.

Figure 7.
Dimensions of NOVA i recloser with substation-mounting frame accessory.

Terminal options	A
Eyebolt, 1/0 - 500 mcm Cable range (630 A maximum)	89
Eyebolt, 4/0 - 1000 mcm Cable range (800 A maximum)	111
Flat pad, 2-hole (630 A maximum)	119
Flat pad, 4-hole (800 A maximum)	121

	B	C
NOVA 15i 110 kV BIL	809	528
NOVA 27i 150 kV BIL	908	627
NOVA 38i 170 kV BIL	1007	676

Constructing a catalog number

To order a type NOVA i recloser with 15 kV, 12.5 kA interrupting, 630 A two-hole pad terminals, 120 V ac heater, no internal voltage sensors, and aluminum housing, the catalog number would be constructed like this:

KNOVA i Basic letters for a NOVA i recloser with base Form 6/FXD recloser control*

1 Recloser type:

- 1 NOVA 15i for 15 kV, 12.5 kA interrupting, 110 kV BIL
- 2 NOVA 15i for 15 kV, 16.0 kA interrupting, 110 kV BIL
- 3 NOVA 27i for 27 kV, 12.5 kA interrupting, 125 kV*** BIL
- 4 NOVA 27i for 27 kV, 16.0 kA interrupting, 125 kV*** BIL
- 5 NOVA 38i for 38 kV, 12.5 kA interrupting, 170 kV BIL

1 Bushing terminals:

- 1 2-hole flat-pad terminal, 630 A max**
- 2 4-hole flat-pad terminal, 800 A max
- 3 Eyebolt terminal, 800 A 4/0 1000 MCM
- 4 Eyebolt terminal, 1/0 to 500 MCM, 630 A max

1 Heater voltage:

- 1 120 V ac Heater
- 2 240 V ac Heater

1 Voltage sensor:

- 1 No voltage sensor per recloser
- 2 Three internal voltage sensors for source side per recloser
- 3 Three internal voltage sensors for source side and three integrated voltage sensors for load side per recloser

1 Housing

- 1 Aluminum housing
- 2 Stainless steel housing

KNOVA i 1 1 1 1 1

KNOVA i –11111 is the catalog number for the required basic NOVA i recloser.
* Include the base catalog number of the selected control when ordering a type NOVA i recloser.
** Two-hole flat-pad terminal provided when not specified.
***150kV option available.

Table 5
Voltage sensing cable

Description	Catalog Number
Cable for three internal voltage sensors, with plugs on both ends maximum 15 m (50 ft). Replace X with number of feet.	KA97ME-X
Cable for three internal voltage sensors and three integrated voltage sensors, with plugs on both ends maximum 15 m (50 ft). Replace X with number of feet.	LCIR-972-X

Table 6
Mounting equipment

Description	Catalog Number
Single pole-mounting hanger with stainless steel hardware	KNOVAi54-3
Single concrete-pole-mounting hanger with stainless steel hardware	KNOVAi54-4
Surge-arrester-mounting brackets with stainless steel hardware	
Inboard mounting brackets	KNOVAi61-2
Outboard mounting brackets	KNOVAi61-1
Alley-pole-mounting hanger with stainless steel hardware	KNOVAi352-1
Arrester brackets (set of 3)	KNOVAi353-1
Arrester brackets (set of 6)	KNOVAi353-2
Substation-mounting frame with stainless steel hardware includes control-mounting bracket for Form 6/FXD Pole Mount Control	KNOVAi59-1
Field kit to mount NOVA i recloser on substation-mounting frame KA89WV1*	KNOVAi457-1
Field kit to mount NOVA i recloser on substation-mounting frame KA584R1*	KNOVAi457-2

* Does not include substation frame.

Table 7
Factory assembly*

Description	Catalog Number
Recloser in single pole-mounting hanger KNOVAi54-3 or KNOVAi54-4	KNOVAi354-1
Recloser in single pole-mounting hanger, KNOVAi54-3 or KNOVAi54-4, with arrester brackets	KNOVAi354-2
Recloser on alley-pole-mounting hanger KNOVAi352-1	KNOVAi456-1
Recloser on alley-pole-mounting hanger KNOVAi352-1 with arrester brackets	KNOVAi456-2

*Covers factory assembly only: recloser, control, and mounting equipment must be ordered separately.

Table 8
Auxiliary switch

Description	Catalog Number
Three-stage auxiliary switch with six independent contacts and receptacle for KNOVAi82 cable	KNOVAi66-2
Auxiliary switch cable with plugs on each end, maximum 30 meters (100 ft) Replace X with number of feet.	KNOVAi82-X

Table 9
Miscellaneous accessories

Description	Catalog Number
Source and load wildlife guards (set of 6), for recloser without the integrated voltage sensors	KNOVAi56-6 or LCIR-1008
Source and load wildlife guards (set of 6), for recloser with the integrated voltage sensors	LCIR-1016

Instructional Literature **IL0104002E**
Effective November 2014

NOVA® 15i, NOVA 27i, and NOVA 38i; Three-phase, microprocessor-controlled reclosers (S280-43)

Electrical Sector Asia Pacific
No.3, Lane 280, Linhong Road,
Changning District,
Shanghai 200335
Tel: 86-21-52000099
Fax: 86-21-52000200

Printed in China
Publication No. IL0104002E
January 2019

Powering Business Worldwide