IEC Separable Connector

COOPER POWER SERIES

Flexible and Easier Connection Long Term Field Life

EATON

Powering Business Worldwide

The Reliability and Stability of Power Distribution

Eaton Cooper Power Systems, a global manufacturer, famous for its market leadership and technical innovation, provides most safe and reliable power transmission and distribution to worldwide power utilities, industries and enterprises, public institutions and homes. We provide a wide range of forward-looking products and solutions for Distributed Generation Installations, Power Quality, Outage Management, Distribution Automation, Environmental Protection.

Products include transformer, regulator, capacitor, MRPs, components, cutouts, disconnectors, overhead switchgear, RMU, VCB, and smart grid solutions, etc., which not only applied widely to substation, outdoor overhead, underground, and in-plant medium voltage distribution systems, but also to railway, solar and wind field.

We are committed to constantly improving electrical distribution for end-users to solve problems, to achieve a more reliable and safer power systems with better power quality. Your success drives us to move forward continuously and we listen to your sound for requirement.

IEC Separable Connector

Outline

24kV,250A Elbow

24kV,250A Straight

17.5kV,630A Separable Connector

24kV,630A Separable Connector

36kV,630A Compact Separable Connector

42kV,1250A Separable Connector

630A Bushing

IEC Fully Shielded Deadfront Surge Arrester for 10kV、20kV、35kV Grid System

Coldshrink Trifurcation Kit

Type A bushing Interface

24kV,250A Elbow 1

24kV,250A Straight 2

Type C bushing Interface

17.5kV,630A Separable Connector 3

24kV,630A Separable Connector 4

24kV,630A Separable Connector（Up to 500mm²）

24kV,630A Separable Connector（Up to 400mm²）

36kV,630A Asymmetrical Tee Connector 5

36kV,630A Compact Separable Connector

36kV,630A Asymmetrical Tee Connector

36kV,630A Symmetrical Tee Connector 6

42kV,1250A Separable Connector 7

630A Bushing 8

IEC Fully Shielded Deadfront Surge Arrester for 10kV Grid System 9

IEC Fully Shielded Deadfront Surge Arrester for 20kV Grid System 10

IEC Fully Shielded Deadfront Surge Arrester for 35kV Grid System 11

Coldshrink Trifurcation Kit 12

Customer Reference List 13

IEC Separable Connector

24kV,250A Elbow

1

24kV,250A Elbow

Outline

Description	Page
Summary	3
Electrical Rating	4
Features and Detailed Description	4
Dimensional Information	5
Ordering Information	5
Catalog Number	5

24kV,250A Elbow (Deadbreak)

Application

- For connection of extruded polymeric cable to transformers, switchgear, sectionalizing cabinets with a premoulded separable connector.
- For indoor and outdoor installations.
- System voltage up to 24kV.
- Continuous current 250A (300A overload current for 8 hours).
- Cable particulars:
  - Extruded polymeric cable (XLPE, EPR, etc).
  - Copper or aluminum conductors.
  - Conductor size: 25–150mm^2.

Performance

- Provides a fully screened and fully submersible separable connection when mated with the proper bushing or plug meet the requirements of EN50180/EN50181-DIN47636/HN52-S-61.
- Built-in capacitive test point allows for an easy check of circuit status or installation of a fault indicator.
- No minimum phase clearance requirements.
- Mounting can be vertical, horizontal, or any angle in between.

Standards

Meets the requirements of GB/T 12706.4-2016, IEC 60502-4:2010, VDE 0278, EDF, HN 52-S-61, BS 2715.

Installation

- No special tools are required.
- Connector may be energized immediately after installation on its mating part.
- Mates with bushings, plugs, and junction devices complying with interface C per EN50180/EN50181 DIN47636/HN52-S-61.

Quality Assurance

- Our manufacturing facility is registered to ISO 9001-2000 by third party audit.
- Electrical routine test.
- X-ray test.

Packing

Carton packaging, weight about 1kg(single phase package).

Electrical Ratings

Maximum system voltage (Um)	24kV
Impulse	125 kV
AC withstand (5 min.)	54kV
Continuous current	250A
Overload (8 hrs. Max.)	300A
Short circuit withstand, 1 sec. (rms sym)	12.5kA

Features and Detailed Description

1. Pin Contact
Tin-plated copper pin screws into the conductor connector with the supplied hex key.

2. Internal Screen
Moulded EPDM conducting rubber screen controls electrical stress.

3. Insulation
Moulded EPDM insulating rubber is formulated and mixed in–house to ensure high quality.

4. Pulling Eye
Encapsulated stainless steel pulling eye with a detent to position the bail.

5. Capacitive Test Point
Capacitive test point provides a means to check circuit status.

6. Stress Relief
The configuration of the outer screen and insulation provides a cable stress relief.

7. Cable Entrance
The sized opening provides an interference fit to maintain a watertight seal.

8. External Screen
Moulded EPDM conducting rubber mates with the cable screen to maintain screen continuity and ensure that the assembly is at earth potential.

9. Earthing Eye
Moulded into the external screen for connection of an earthing wire.

10. Conductor Contact
Inertia welded bimetallic compression connector accepts copper or aluminum conductors.

11. Stainless Steel Bail(Not Shown In the Figure)
Secures the connector to its mating bushing or accessory.

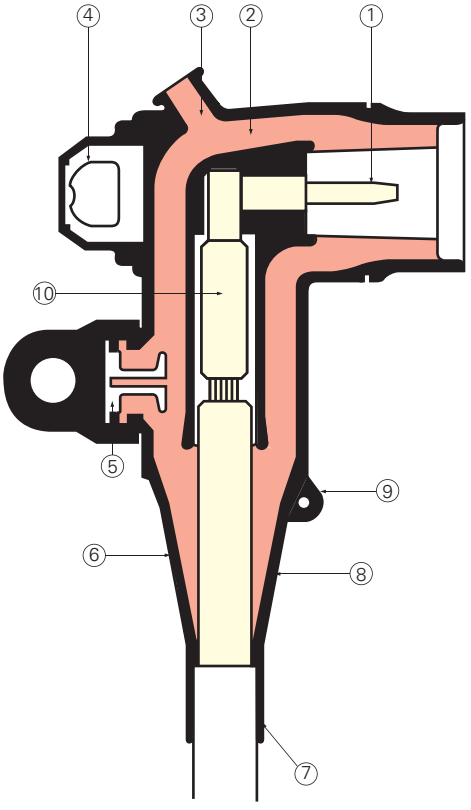

IEC Separable Connector

24kV,250A Elbow

Dimensional Information

(mm)

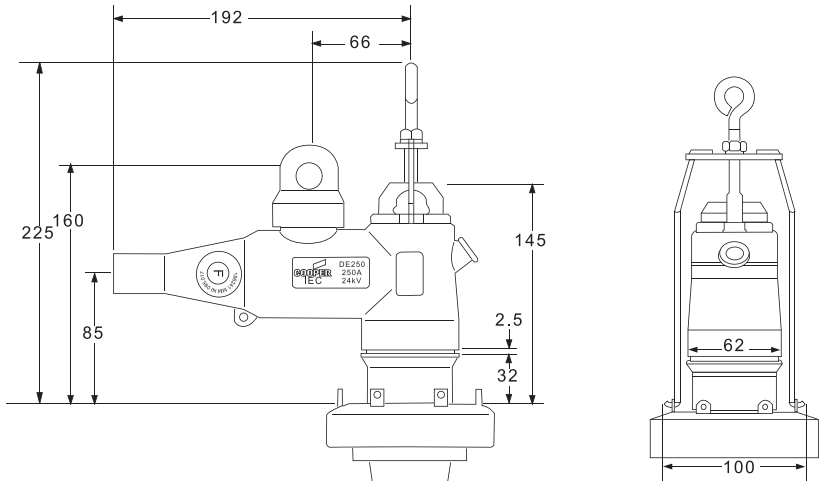

Ordering Information

DE 2 24 X X XX 3 HS XX

- **Product Name**
- **Rated Current 250A**
- **Maximum Voltage 24kV**
- **Cable Insulation Range**
  - **B** = 13.5 ~ 17.4 mm
  - **D** = 16.3 ~ 20.8 mm
  - **F** = 19.6 ~ 24.1 mm
  - **H** = 23.1 ~ 28.7 mm
  - **J** = 27.9 ~ 33.5 mm
- **Contact Pin**
  - **P** = Copper
  - **U** = Bi-Metallic
- **Conductor Code**
  - **25** = 25 mm²
  - **35** = 35 mm²
  - **50** = 50 mm²
  - **70** = 70 mm²
  - **95** = 95 mm²
  - **120** = 120 mm²
  - **150** = 150 mm²
- **3-phases Package**
- **Heatshrink Trifurcation Kit**
- **Heatshrink Trifurcation Kit**
  - **01** = 25-50 mm²
  - **02** = 70-150mm²

Catalogue Number

According to the insulation diameter of the 8.7/15kV cable meet the IEC 60502-4:2010, we recommend the 250A elbow part numbers as below table.

Part Number	Cable Cross Section (mm²)	Cable Insulation Range (mm)	Heatshrink Trifurcation Kit (Optional)
DE224BP253E	25	13.5-17.4	HS01
DE224BP353E	35	13.5-17.4	HS01
DE224DP503E	50	16.3-20.8	HS01
DE224DP703E	70	16.3-20.8	HS02
DE224FP953E	95	19.6-24.1	HS02
DE224FP1203E	120	19.6-24.1	HS02
DE224HP1503E	150	23.1-28.7	HS03

Note: Above table is just for refence, part number is determined by the actual cable insulation diameter.

According to the insulation diameter of the 12/20kV cable meet the IEC 60502-4:2010, we recommend the 250A elbow part numbers as below table.

Part Number	Cable Cross Section (mm²)	Cable Insulation Range (mm)
DE224DP353E	35	16.3-20.8
DE224DP503E	50	16.3-20.8
DE224FP703E	70	19.6-24.1
DE224FP953E	95	19.6-24.1
DE224HP1203E	120	23.1-28.7
DE224HP1503E	150	23.1-28.7

Note: Above table is just for refence, part number is determined by the actual cable insulation diameter.

According to the insulation diameter of the 18/30kV cable meet the IEC 60502-4:2010, we recommend the 250A elbow part numbers as below table.

Part Number	Cable Cross Section (mm²)	Cable Insulation Range (mm)
DE224HP353E	35	23.1-28.7
DE224HP503E	50	23.1-28.7
DE224HP703E	70	23.1-28.7
DE224JP953E	95	27.9-33.5
DE224JP1203E	120	27.9-33.5
DE224JP1503E	150	27.9-33.5

Note: Above table is just for refence, part number is determined by the actual cable insulation diameter.

24kV,250A Straight

Outline

Description	Page
Summary	6
Electrical Rating	7
Features and Detailed Description	7
Dimensional Information	8
Ordering Information	8
Catalog Number	8

24kV,250A Straight (Deadbreak)

Application

- For connection of extruded polymeric cable to transformers, switchgear, sectionalizing cabinets with a premoulded separable connector.
- For indoor and outdoor installations.
- System voltage up to 24kV.
- Continuous current 250A (300A overload current for 8 hours).
- Cable particulars:
  - Extruded polymeric cable (XLPE, EPR, etc).
  - Copper or aluminum conductors.
  - Conductor size: 25–120mm^2.

Performance

- Provides a fully screened and fully submersible separable connection when mated with the proper bushing or plug meet the requirements of EN50180/EN50181-DIN47636/HN52-S-61.
- Built-in capacitive test point allows for an easy check of circuit status or installation of a fault indicator.
- No minimum phase clearance requirements.
- Mounting can be vertical, horizontal, or any angle in between.

Standards

Meets the requirements of GB/T 12706.4-2016, IEC 60502-4:2010, VDE 0278, EDF, HN 52-S-61, BS 2715.

Installation

- No special tools are required.
- Connector may be energized immediately after installation on its mating part.
- Mates with bushings, plugs, and junction devices complying with interface C per EN50180/EN50181 DIN47636/HN52-S-61.

Quality Assurance

- Our manufacturing facility is registered to ISO 9001-2000 by third party audit.
- Electrical routine test.
- X-ray test.

Packing

Carton packaging, weight about 1kg(single phase package).

IEC Separable Connector

24kV,250A Straight

Electrical Ratings

Maximum system voltage (Um)	24kV
Impulse	125 kV
AC withstand (5 min.)	54kV
Continuous current	250A
Overload (8 hrs. Max.)	300A
Short circuit withstand, 1 sec. (rms sym)	12.5kA

Features and Detailed Description

1. Conductor Contact
Supplies bimetallic and copper conductor contact to accommodate different cable conductor type.

2. Internal Screen
Moulded EPDM conducting rubber screen controls electrical stress.

3. Capacitive Test Point
Capacitive test point provides a means to check circuit status.

4. Stress Relief
The configuration of the outer screen and insulation provides cable stress relief.

5. Cable Entrance
The sized opening provides an interference fit to maintain a watertight seal.

6. External Screen
Moulded EPDM conducting rubber mates with the cable screen to maintain screen continuity and ensure that the assembly is at earth potential.

7. Earthing Eye
Moulded into the external screen for connection of an earthing wire.

8. Insulation
Moulded EPDM insulating rubber is formulated and mixed in–house to ensure high quality.

9. Stainless Steel Bail(Not Shown In The Figure)
Secures the connector to its mating bushing or accessory.

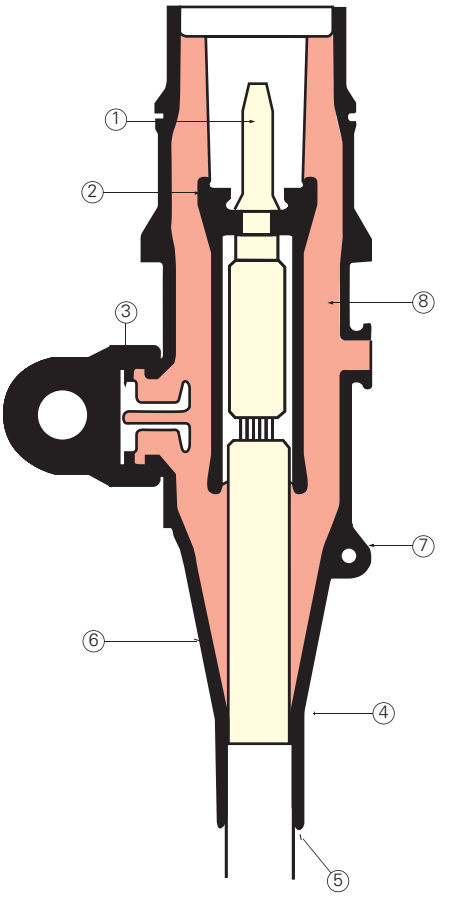

Dimensional Information

(in mm)

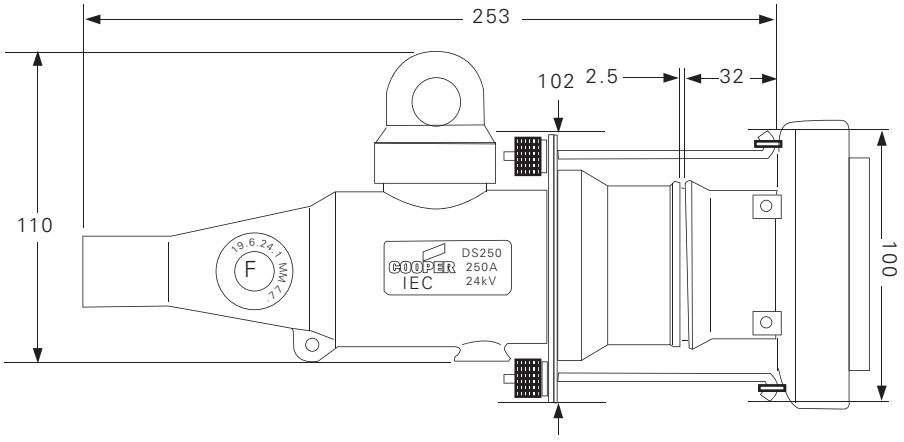

Ordering Information

DS 2 24 X X XX 3 HS XX

- **Product Name**
- **Rated Current 250A**
- **Maximum Voltage 24kV**
- **Cable Insulation Range**
  - **B** = 13.5 ~ 17.4 mm
  - **D** = 16.3 ~ 20.8 mm
  - **F** = 19.6 ~ 24.1 mm
  - **H** = 23.1 ~ 28.7 mm
  - **J** = 27.9 ~ 33.5 mm
- **Contact Pin**
  - **P** = Copper
  - **U** = Bi-Metallic
- **Conductor Code**
  - **25** = 25 mm²
  - **35** = 35 mm²
  - **50** = 50 mm²
  - **70** = 70 mm²
  - **95** = 95 mm²
  - **120** = 120 mm²
- **3-phases Package**
- **Heatshrink Trifurcation Kit**
- **Heatshrink Trifurcation Kit**
  - **01** = 25-50 mm²
  - **02** = 70-120mm²

Ordering List

According to the insulation diameter of the 8.7/15kV cable meet the IEC 60502-4:2010, we recommend the 250A elbow part numbers as below table.

Part Number	Cable Cross Section (mm²)	Cable Insulation Range (mm)	Heatshrink Trifurcation Kit (Optional)
DS224BP253E	25	13.5-17.4	HS01
DS224BP353E	35	13.5-17.4	HS01
DS224DP503E	50	16.3-20.8	HS01
DS224DP703E	70	16.3-20.8	HS02
DS224FP953E	95	19.6-24.1	HS02
DS224FP1203E	120	19.6-24.1	HS02

Note: Above table is just for refence, part number is determined by the actual cable insulation diameter.

According to the insulation diameter of the 12/20kV cable meet the IEC 60502-4:2010, we recommend the 250A elbow part numbers as below table.

Part Number	Cable Cross Section (mm²)	Cable Insulation Range (mm)
DS224DP353E	35	16.3-20.8
DS224DP503E	50	16.3-20.8
DS224FP703E	70	19.6-24.1
DS224FP953E	95	19.6-24.1
DS224HP1203E	120	23.1-28.7

Note: Above table is just for refence, part number is determined by the actual cable insulation diameter.

According to the insulation diameter of the 18/30kV cable meet the IEC 60502-4:2010, we recommend the 250A elbow part numbers as below table.

Part Number	Cable Cross Section (mm²)	Cable Insulation Range (mm)
DS224HP353E	35	23.1-28.7
DS224HP503E	50	23.1-28.7
DS224HP703E	70	23.1-28.7
DS224JP953E	95	27.9-33.5
DS224JP1203E	120	27.9-33.5

Note: Above table is just for refence, part number is determined by the actual cable insulation diameter.

IEC Separable Connector

17.5kV,630A Separable Connector

17.5kV,630A Separable Connector

Outline

Description	Page
Summary	9
Electrical Rating	10
Features and Detailed Description	10
17.5kV,630A Short Tee	11
17.5kV,630A Bushing Tee	12
Ordering Information	13
Catalog Number	14

17.5kV,630A Separable Connector

Application

- For connection of extruded polymeric cable to transformers, switchgear, sectionalizing cabinets with a premoulded 630A separable connector.
- For indoor and outdoor installations.
- System voltage up to 17.5kV.
- Continuous current 630A (900A overload current for 8 hours).
- Cable particulars:
  - Extruded polymeric cable (XLPE, EPR, etc).
  - Copper or aluminum conductors.
  - Conductor size: 8.7/15(17.5) kV cable 35 -400mm^2.

Performance

- Provides a fully screened and fully submersible separable connection when mated with the proper bushing or plug meet the requirements of EN50180/EN50181-DIN47636/HN52-S-61.
- Built-in capacitive test point allows for an easy check of circuit status or installation of a fault indicator.
- No minimum phase clearance requirements.
- Mounting can be vertical, horizontal, or any angle in between.

Standards

Meets the requirements of GB/T 12706.4-2016, IEC 60502-4:2010, VDE 0278, EDF, HN 52-S-61, BS 2715.

Installation

- No special tools are required.
- Connector may be energized immediately after installation on its mating part.
- Mates with bushings, plugs, and junction devices complying with interface C per EN50180/EN50181 DIN47636/HN52-S-61.

Quality Assurance

- Our manufacturing facility is registered to ISO 9001-2000 by third party audit.
- Electrical routine test.
- X-ray test.

Packing

Carton packaging, weight about 2.5kg(single phase package.

Electrical Ratings

	DTS617	DTB617
Maximum system voltage (Um)	17.5kV	17.5kV
Impulse	95 kV	95 kV
AC withstand (5 min.)	39kV	39kV
Continuous current	630A	630A
Partial discharge	≤2pC @ 15kV	≤2pC @ 15kV

Features and Detailed Description

1. Clamping Screw
Tin-plated copper clamping screw secures the conductor contact to the bushing.

2. Insulation
Moulded EPDM insulating rubber is formulated and mixed in-house to ensure high quality.

3. Basic Insulating Plug
Moulded epoxy part has a threaded metal insert to accept the clamping screw.

4. Capacitive Test Point
Capacitive test point provides a means to check circuit status.

5. Rubber Cap
Moulded EPDM conducting rubber cap protects and earths the test point during normal operation, includes pulling eye.

6. Internal Screen
Moulded EPDM conducting rubber screen controls electrical stress.

7. Stress Relief
The configuration of the outer screen and insulation provides cable stress relief.

8. Cable Adaptor
The sized opening provides an interference fit to maintain a watertight seal and provides the initial cable stress relief.

9. Earthing Eye
Moulded into the external screen for connection of an earthing wire.

10. External Screen
Moulded EPDM conducting rubber mates with the cable screen to maintain screen continuity and ensure that the assembly is at earth potential.

11. Conductor Contact
Supplies bimetallic and copper conductor contact to accommodate different cable conductor type.

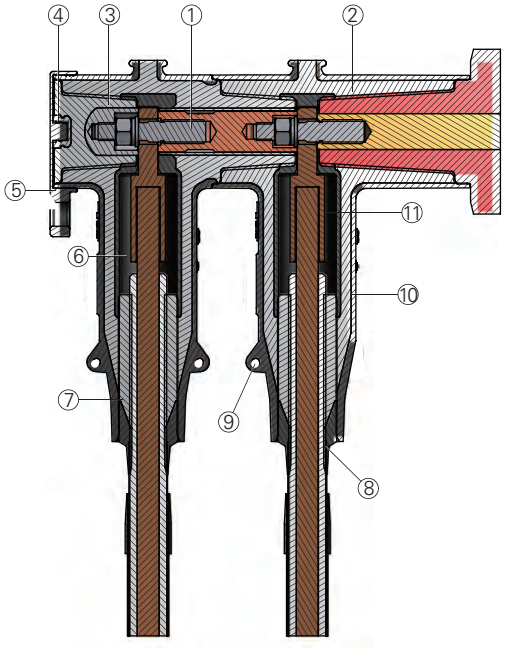

IEC Separable Connector

17.5kV,630A Short Tee

3

17.5kV,630A Short Tee

Application

For connection of extruded polymeric cable to transformers, switchgear, motors and other equipment with a premoulded 630A Short Tee connector which mates with bushings and junction devices complying with interface C per CENELEC 50180/50181 and DIN47636/HN52-S-61.

The 630A Short tee can be insulated by the dead–end plug or connects to bushing tee & dead–front surge arrester.

Ordering Information

DTS 617 X X XX X X 3 HS XX

Product Name
630A asymmetric short tee

Rated Current/Voltage
630A rated current
Maximum Voltage 17.5kV

Cable Insulation Range

AA = 13.5 - 17.2mm	**A** = 16.3 - 19.3mm
B = 18.3 - 21.0mm	**C** = 20.0 - 24.1mm
D = 23.1 - 27.0mm	**E** = 24.9 - 28.9mm
F = 27.7 - 32.6mm	**G** = 30.9 - 36.2mm
H = 34.0 - 39.5mm	

Conductor Contact
C = Copper
U = Bi-Metallic

Cable Conductor Code
35 = 35mm^2
50 = 50 mm^2
70 = 70mm^2
95 = 95 mm^2
120 = 120mm^2
150 = 150 mm^2
185 = 185mm^2
240 = 240 mm^2
300 = 300mm^2
400 = 400 mm^2

Dead-end Plug
P = With dead-end plug
O = Without dead-end plug

Test Point
T = With test point
Blank = Without test point

3 = 3-phases Package

Heatshrink Trifurcation Kit
01 = 35-50mm^2
02 = 70-120mm^2
03 = 150-240mm^2
04 = 300-400mm^2

Heatshrink Trifurcation Kit

Kit Contents

Item	Description
1	630A short tee body
2	Deadend plug
3	Insulation cap
4	Cable adaptor
5	Conductor contact
6	Stud
7	Earthing wire, silicone grease, cleaning wiper and sand paper
8	Self-fusing insulation tape, semi conductive tape and PVC tape
9	Ruler and installation manual
10	Certificate of qualification

17.5kV,630A Bushing Tee

Application

For connection of 630A bushing Tee connector to short tee or another bushing tee to supply multiple branch of cable connection solutions. It can't be connected to 630A type C bushing.

The 630A Short tee can be insulated by the dead–end plug or connects to bushing tee & dead–front surge arrester.

Ordering Information

DTB 617 X X XX X X 3 HS XX

Product Name
630A bushing tee

Rated Current/Voltage
630A rated current
Maximum Voltage 17.5kV

Cable Insulation Range

AA = 13.5 - 17.2mm	**A** = 16.3 - 19.3mm
B = 18.3 - 21.0mm	**C** = 20.0 - 24.1mm
D = 23.1 - 27.0mm	**E** = 24.9 - 28.9mm
F = 27.7 - 32.6mm	**G** = 30.9 - 36.2mm
H = 34.0 - 39.5mm	

Conductor Contact
C = Copper
U = Bi–Metallic

Cable Conductor Code
35 = 35mm^2
50 = 50 mm^2
70 = 70mm^2
95 = 95 mm^2
120 = 120mm^2
150 = 150 mm^2
185 = 185mm^2
240 = 240 mm^2
300 = 300mm^2
400 = 400 mm^2

Dead-end Plug
P = With dead-end plug
O = Without dead-end plug

Test Point
T = With test point
Blank = Without test point

3 = 3-phases Package

Heatshrink Trifurcation Kit
01 = 35-50mm^2
02 = 70-120mm^2
03 = 150-240mm^2
04 = 300-400mm^2

Heatshrink Trifurcation Kit

Kit Contents

Item	Description
1	630A bushing tee body
2	Cable adaptor
3	Contact conductor
4	Rod
5	Earthing wire, silicone grease, cleaning wiper and sand paper
6	Self-fusing insulation tape, semi conductive tape and PVC tape
7	Ruler and installation manual
8	Certificate of qualification

IEC Separable Connector

17.5kV,630A Short Tee

Catalog Number

Catalog numbers of 630A dead front short tee with dead end plug, copper conductor contact and heat shrink trifurcation kit

Part Number	Cable Insulation Range (mm)	Cable Cross Section (mm^2)	Heat Shrink Trifurcation Kit (Optional)
DTS617AC35P3JE	16.3-19.3	35	HS01
DTS617AC50P3JE	16.3-19.3	50	HS01
DTS617BC70P3JE	18.3-21.0	70	HS02
DTS617CC95P3JE	20.0-24.1	95	HS02
DTS617CC120P3JE	20.0-24.1	120	HS02
DTS617DC150P3JE	23.1-27.0	150	HS03
DTS617DC185P3JE	23.1-27.0	185	HS03
DTS617EC240P3JE	25.6-29.0	240	HS03
DTS617FC300P3JE	27.7-32.6	300	HS04
DTS617GC400P3JE	30.9-36.2	400	HS04

Note: 1. Please select proper part number based on the cable insulation diameter and take the cable conductor cross section of as a reference.
2. Above catalog numbers are just accommodate to 8.7/15(17.5kV) cable.
3. J means economic version of 630A tee.

Catalog numbers of 630A dead front short tee with dead end plug, Bi-metallic conductor contact and heat shrink trifurcation kit

Part Number	Cable Insulation Range (mm)	Cable Cross Section (mm^2)	Heat Shrink Trifurcation Kit (Optional)
DTS617AU35P3JE	16.3-19.3	35	HS01
DTS617AU50P3JE	16.3-19.3	50	HS01
DTS617BU70P3JE	18.3-21.0	70	HS02
DTS617CU95P3JE	20.0-24.1	95	HS02
DTS617CU120P3JE	20.0-24.1	120	HS02
DTS617DU150P3JE	23.1-27.0	150	HS03
DTS617DU185P3JE	23.1-27.0	185	HS03
DTS617EU240P3JE	25.6-29.0	240	HS03
DTS617FU300P3JE	27.7-32.6	300	HS04
DTS617GU400P3JE	30.9-36.2	400	HS04

Note: 1. Please select proper part number based on the cable insulation diameter and take the cable conductor cross section of as a reference.
2. Above catalog numbers are just accommodate to 8.7/15(17.5kV) cable.
3. J means economic version of 630A tee.

Catalog numbers of 630A dead front bushing tee with cooper conductor contact and heat shrink trifurcation kit

Part Number	Cable Insulation Range (mm)	Cable Cross Section (mm^2)	Heat Shrink Trifurcation Kit (Optional)
DTB617AC35O3JE	16.3-19.3	35	HS01
DTB617AC50O3JE	16.3-19.3	50	HS01
DTB617BC70O3JE	18.3-21.0	70	HS02
DTB617CC95O3JE	20.0-24.1	95	HS02
DTB617CC120O3JE	20.0-24.1	120	HS02
DTB617DC150O3JE	23.1-27.0	150	HS03
DTB617DC185O3JE	23.1-27.0	185	HS03
DTB617EC240O3JE	25.6-29.0	240	HS03
DTB617FC300O3JE	27.7-32.6	300	HS04
DTB617GC400O3JE	30.9-36.2	400	HS04

Note: 1. Please select proper part number based on the cable insulation diameter and take the cable conductor cross section of as a reference.
2. Above catalog numbers are just accommodate to 8.7/15(17.5kV) cable.
3. J means economic version of 630A tee.

Catalog numbers of 630A dead front bushing tee with dead end plug, Bi-metallic conductor contact and heat shrink trifurcation kit

Part Number	Cable Insulation Range (mm)	Cable Cross Section (mm^2)	Heat Shrink Trifurcation Kit (Optional)
DTB617AU35O3JE	16.3-19.3	35	HS01
DTB617AU50O3JE	16.3-19.3	50	HS01
DTB617BU70O3JE	18.3-21.0	70	HS02
DTB617CU95O3JE	20.0-24.1	95	HS02
DTB617CU120O3JE	20.0-24.1	120	HS02
DTB617DU150O3JE	23.1-27.0	150	HS03
DTB617DU185O3JE	23.1-27.0	185	HS03
DTB617EU240O3JE	25.6-29.0	240	HS03
DTB617FU300O3JE	27.7-32.6	300	HS04
DTB617GU400O3JE	30.9-36.2	400	HS04

Note: 1. Please select proper part number based on the cable insulation diameter and take the cable conductor cross section of as a reference.
2. Above catalog numbers are just accommodate to 8.7/15(17.5kV) cable.
3. J means economic version of 630A tee.

Application

Application of 630A short tee and bushing tee in the RMU

(all dimensions are in mm)

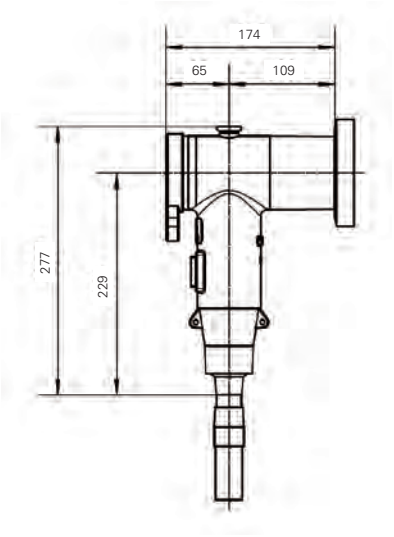

one way 630A short tee connector

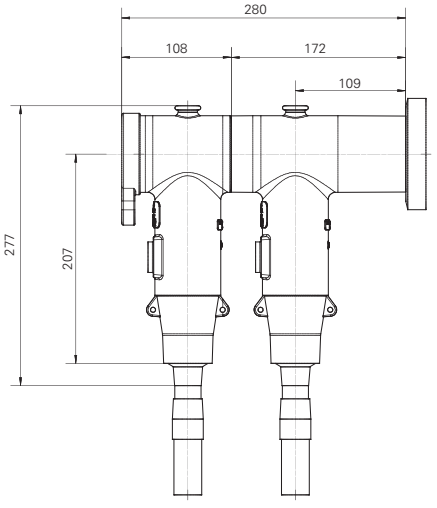

one way 630A short tee with one way 630A bushing tee

IEC Separable Connector

24kV,630A Separable Connector

24kV,630A Separable Connector（Up to 500mm²）

Outline

Description	Page
Summary	15
Electrical Rating	16
Features and Detailed Description	16
24kV,630A Short Tee	17
24kV,630A Bushing Tee	18
Ordering Information	19
Catalog Number	20

4

24kV,630A Separable Connector（Up to 500mm²）

Application

- For connection of extruded polymeric cable to transformers, switchgear, sectionalizing cabinets with a premoulded 630A separable connector.
- For indoor and outdoor installations.
- System voltage up to 24kV (applicable to unearthed system).
- Continuous current 630A (900A overload current for 8 hours).
- Cable particulars:
  - Extruded polymeric cable (XLPE, EPR, etc).
  - Copper or aluminum conductors.
  - Conductor size: 12/20(24) kV cable 35-500mm².

Performance

- Provides a fully screened and fully submersible separable connection when mated with the proper bushing or plug meet the requirements of EN50180/EN50181-DIN47636/HN52-S-61.
- Built-in capacitive test point allows for an easy check of circuit status or installation of a fault indicator.
- No minimum phase clearance requirements.
- Mounting can be vertical, horizontal, or any angle in between.

Standards

Meets the requirements of GB/T 12706.4-2016, IEC 60502-4:2010, VDE 0278, EDF, HN 52-S-61, BS 2715.

Installation

- No special tools are required.
- Connector may be energized immediately after installation on its mating part.
- Mates with bushings, plugs, and junction devices complying with interface C per EN50180/EN50181 DIN47636/HN52-S-61.

Quality Assurance

- Our manufacturing facility is registered to ISO 9001-2000 by third party audit.
- Electrical routine test.
- X-ray test.

Packing

Carton packaging, weight about 3kg(single phase package).

Electrical Ratings

	DTS 624	DTB 624
Maximum system voltage (Um)	24kV	24kV
Impulse	125 kV	125 kV
AC withstand (5 min.)	54kV	54kV
Continuous current	630A	630A
Short circuit withstand, 1s,(rms sym)	35kA	35kA
Partial discharge	≤2pC @ 20kV	≤2pC @ 20kV
Dynamic current	83.9kA/0.06s	83.9kA/0.06s

Features and Detailed Description

1. Clamping Screw
Tin-plated copper clamping screw secures the conductor contact to the bushing.

2. Insulation
Moulded EPDM insulating rubber is formulated and mixed in–house to ensure high quality.

3. Basic Insulating Plug
Moulded epoxy part has a threaded metal insert to accept the clamping screw.

4. Capacitive Test Point
Capacitive test point provides a means to check circuit status.

5. Rubber Cap
Moulded EPDM conducting rubber cap protects and earths the test point during normal operation, includes pulling eye.

6. Internal Screen
Moulded EPDM conducting rubber screen controls electrical stress.

7. Capacitive Test Point(Optional)
Capacitive test point provides means to check circuit status.

8. Stress Relief
The configuration of the outer screen and insulation provides cable stress relief.

9. Cable Adaptor
The sized opening provides an interference fit to maintain a watertight seal and provides the initial cable stress relief.

10. Earthing Eye
Moulded into the external screen for connection of an earthing wire.

11. External Screen
Moulded EPDM conducting rubber mates with the cable screen to maintain screen continuity and ensure that the assembly is at earth potential.

12. Conductor Contact
Supplies bimetallic and copper conductor contact to accommodate different cable conductor type.

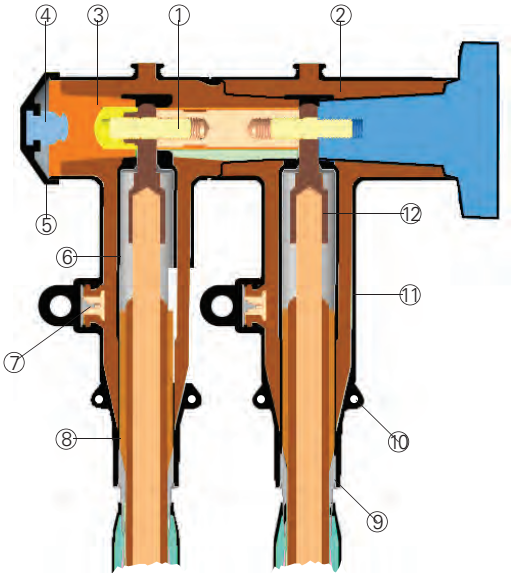

IEC Separable Connector

24kV,630A Separable Connector

24kV,630A Short Tee（Up to 500mm²）

Application

For connection of extruded polymeric cable to transformers, switchgear, motors and other equipment with a premoulded 630A Short Tee connector which mates with bushings and junction devices complying with interface C per CENELEC 50180/50181 and DIN47636/HN52-S-61.

The 630A Short tee can be insulated by the dead-end plug or connects to bushing tee & dead-front surge arrester.

4

Ordering Information

DTS 624 X X XX X X 3

Product Name
630A asymmetric short tee

Rated Current/Voltage
630A rated current,
Maximum voltage 24kV

Cable Insulation Range

AA = 13.5 - 17.2mm	**A** = 16.3 - 19.3mm
B = 18.3 - 21.0mm	**C** = 20.0 - 24.1mm
D = 23.1 - 27.0mm	**E** = 24.9 - 28.9mm
F = 27.7 - 32.6mm	**G** = 30.9 - 36.2mm
H = 34.0 - 39.5mm	

Conductor Contact
C = Copper
U = Bi-Metallic

Cable Conductor Code

35 = 35mm²	**185** = 185mm²
50 = 50 mm²	**240** = 240 mm²
70 = 70mm²	**300** = 300mm²
95 = 95 mm²	**400** = 400 mm²
120 = 120mm²	**500** = 500 mm²
150 = 150 mm²	

Dead-end Plug
P = With dead-end plug
O = Without dead-end plug

Test Point
T = With test point
Blank = Without test point

3 = 3-phases Package

Kit Contents

Item	Description
1	630A short tee body
2	Deadend plug
3	Insulation cap
4	Cable adaptor
5	Conductor contact
6	Stud
7	Earthing wire, silicone grease, cleaning wiper and sand paper
8	Self-fusing insulation tape, semi conductive tape and PVC tape
9	Ruler and installation manual
10	Certificate of qualification

24kV,630A Bushing Tee（Up to 500mm^2）

Application

For connection of 630A bushing Tee connector to short tee or another bushing tee to supply multiple branch of cable connection solutions. It can't be connected to 630A type C bushing.

The 630A Short tee can be insulated by the dead-end plug or connects to bushing tee & dead-front surge arrester.

Ordering Information

DTB 624 X X XX X X 3

Product Name
630A bushing tee

Rated Current/Voltage
630A rated current,
Maximum voltage 24kV

Cable Insulation Range

AA = 13.5 - 17.2mm	**A** = 16.3 - 19.3mm
B = 18.3 - 21.0mm	**C** = 20.0 - 24.1mm
D = 23.1 - 27.0mm	**E** = 24.9 - 28.9mm
F = 27.7 - 32.6mm	**G** = 30.9 - 36.2mm
H = 34.0 - 39.5mm	

Conductor Contact
C = Copper
U = Bi-Metallic

Cable Conductor Code

35 = 35mm^2	**185** = 185mm^2
50 = 50 mm^2	**240** = 240 mm^2
70 = 70mm^2	**300** = 300mm^2
95 = 95 mm^2	**400** = 400 mm^2
120 = 120mm^2	**500** = 500 mm^2
150 = 150 mm^2	

Dead-end Plug
P = With dead-end plug
O = Without dead-end plug

Test Point
T = With test point
Blank = Without test point

3 = 3-phases Package

Kit Contents

Item	Description
1	630A bushing tee body
2	Cable adaptor
3	Conductor contact
4	Rod
5	Earthing wire, silicone grease, cleaning wiper and sand paper
6	Self-fusing insulation tape, semi conductive tape and PVC tape
7	Ruler and installation manual
8	Certificate of qualification

Catalog Number

Catalog numbers of 630A dead front short tee with dead end plug, copper conductor contact and test point.

Part Number (Without Heatshrink Trifurcation Kit)	Cable Insulation Range (mm)	Cable Cross Section (mm^2)
DTS624BC35PT3E	18.3-21.0	35
DTS624BC50PT3E	18.3-21.0	50
DTS624CC70PT3E	20.0-24.1	70
DTS624CC95PT3E	20.0-24.1	95
DTS624DC120PT3E	23.1-27.0	120
DTS624EC150PT3E	25.6-29.0	150
DTS624FC185PT3E	27.7-32.6	185
DTS624FC240PT3E	27.7-32.6	240
DTS624GC300PT3E	30.9-36.2	300
DTS624HC400PT3E	34.0-39.5	400

Note: 1. Please select proper part number based on the cable insulation diameter and take the cable conductor cross section of as a reference.
2. Above catalog numbers are just accommodate to 12/20kV cable.

Catalog numbers of 630A dead front short tee with dead end plug, copper conductor contact.

Part Number (Without Heatshrink Trifurcation Kit)	Cable Insulation Range (mm)	Cable Cross Section (mm^2)
DTS624BC35P3E	18.3-21.0	35
DTS624BC50P3E	18.3-21.0	50
DTS624CC70P3E	20.0-24.1	70
DTS624CC95P3E	20.0-24.1	95
DTS624DC120P3E	23.1-27.0	120
DTS624EC150P3E	25.6-29.0	150
DTS624FC185P3E	27.7-32.6	185
DTS624FC240P3E	27.7-32.6	240
DTS624GC300P3E	30.9-36.2	300
DTS624HC400P3E	34.0-39.5	400

Note: 1. Please select proper part number based on the cable insulation diameter and take the cable conductor cross section of as a reference.
2. Above catalog numbers are just accommodate to 12/20kV cable.

Catalog numbers of 630A dead front bushing tee with copper conductor contact and test point.

Part Number (Without Heatshrink Trifurcation Kit)	Cable Insulation Range (mm)	Cable Cross Section (mm^2)
DTB624BC35OT3E	18.3-21.0	35
DTB624BC50OT3E	18.3-21.0	50
DTB624CC70OT3E	20.0-24.1	70
DTB624CC95OT3E	20.0-24.1	95
DTB624DC120OT3E	23.1-27.0	120
DTB624EC150OT3E	25.6-29.0	150
DTB624FC185OT3E	27.7-32.6	185
DTB624FC240OT3E	27.7-32.6	240
DTB624GC300OT3E	30.9-36.2	300
DTB624HC400OT3E	34.0-39.5	400

Note: 1. Please select proper part number based on the cable insulation diameter and take the cable conductor cross section of as a reference.
2. Above catalog numbers are just accommodate to 12/20kV cable.

Catalog numbers of 630A dead front bushing tee with copper conductor contact.

Part Number (Without Heatshrink Trifurcation Kit)	Cable Insulation Range (mm)	Cable Cross Section (mm^2)
DTB624BC35O3E	18.3-21.0	35
DTB624BC50O3E	18.3-21.0	50
DTB624CC70O3E	20.0-24.1	70
DTB624CC95O3E	20.0-24.1	95
DTB624DC120O3E	23.1-27.0	120
DTB624EC150O3E	25.6-29.0	150
DTB624FC185O3E	27.7-32.6	185
DTB624FC240O3E	27.7-32.6	240
DTB624GC300O3E	30.9-36.2	300
DTB624HC400O3E	34.0-39.5	400

Note: 1. Please select proper part number based on the cable insulation diameter and take the cable conductor cross section of as a reference.
2. Above catalog numbers are just accommodate to 12/20kV cable.

Application

Application of 24kV 630A short tee and bushing tee in the RMU

(all dimensions are in mm)

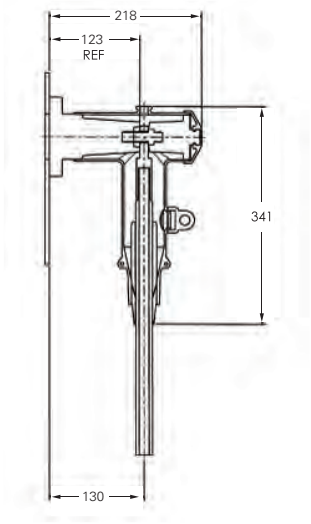

one way 630A short tee connector

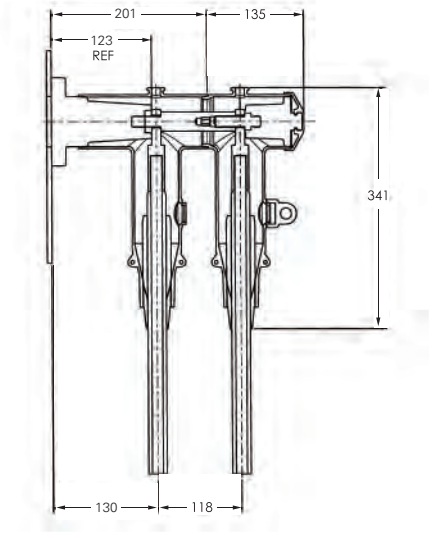

one way 630A short tee with one way 630A bushing tee

24kV,630A Separable Connector（Up to 400mm²）

Outline

Description	Page
Summary	21
Electrical Rating	22
Features and Detailed Description	22
24kV,630A Short Tee	23
24kV,630A Bushing Tee	24
Ordering Information	25
Catalog Number	26

24kV,630A Separable Connector（Up to 400mm²）

Application

- For connection of extruded polymeric cable to transformers, switchgear, sectionalizing cabinets with a premoulded 630A separable connector.
- For indoor and outdoor installations.
- System voltage up to 24kV.
- Continuous current 630A (900A overload current for 8 hours).
- Cable particulars:
  - Extruded polymeric cable (XLPE, EPR, etc).
  - Copper or aluminum conductors.
  - Conductor size: 12/20(24) kV cable 35-400mm².

Performance

- Provides a fully screened and fully submersible separable connection when mated with the proper bushing or plug meet the requirements of EN50180/EN50181-DIN47636/HN52-S-61.
- Built-in capacitive test point allows for an easy check of circuit status or installation of a fault indicator.
- No minimum phase clearance requirements.
- Mounting can be vertical, horizontal, or any angle in between.

Standards

Meets the requirements of GB/T 12706.4-2016, IEC 60502-4:2010, VDE 0278, EDF, HN 52-S-61, BS 2715.

Installation

- No special tools are required.
- Connector may be energized immediately after installation on its mating part.
- Mates with bushings, plugs, and junction devices complying with interface C per EN50180/EN50181 DIN47636/HN52-S-61.

Quality Assurance

- Our manufacturing facility is registered to ISO 9001-2000 by third party audit.
- Electrical routine test.
- X-ray test.

Packing

Carton packaging, weight about 2.5kg(single phase package).

Electrical Ratings

	DTS 624 S	DTB 624 S
Maximum system voltage (Um)	24kV	24kV
Impulse	125 kV	125 kV
AC withstand (5 min.)	54kV	54kV
Continuous current	630A	630A
Partial discharge	≤10pC @ 20kV	≤10pC @ 20kV

Features and Detailed Description

1. Clamping Screw
Tin-plated copper clamping screw secures the conductor contact to the bushing.

2. Insulation
Moulded EPDM insulating rubber is formulated and mixed in-house to ensure high quality.

3. Basic Insulating Plug
Moulded epoxy part has a threaded metal insert to accept the clamping screw.

4. Capacitive Test Point
Capacitive test point provides a means to check circuit status.

5. Rubber Cap
Moulded EPDM conducting rubber cap protects and earths the test point during normal operation, includes pulling eye.

6. Internal Screen
Moulded EPDM conducting rubber screen controls electrical stress.

7. Stress Relief
The configuration of the outer screen and insulation provides cable stress relief.

8. Cable Adaptor
The sized opening provides an interference fit to maintain a watertight seal and provides the initial cable stress relief.

9. Earthing Eye
Moulded into the external screen for connection of an earthing wire.

10. External Screen
Moulded EPDM conducting rubber mates with the cable screen to maintain screen continuity and ensure that the assembly is at earth potential.

11. Conductor Contact
Supplies bimetallic and copper conductor contact to accommodate different cable conductor type.

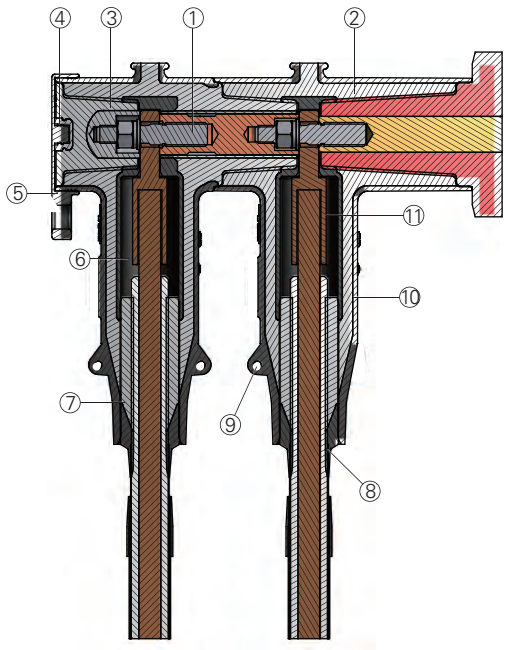

IEC Separable Connector

24kV,630A Separable Connector

24kV,630A Short Tee（Up To 400mm²）

Application

6For connection of extruded polymeric cable to transformers, switchgear, motors and other equipment with a premoulded 630A Short Tee connector which mates with bushings and junction devices complying with interface C per CENELEC 50180/50181 and DIN47636/HN52-S-61.

The 630A Short tee can be insulated by the dead-end plug or connects to bushing tee & dead-front surge arrester.

4

Ordering Information

DTS 624S X X XX X X 3 HS XX

Product Name
630A asymmetric short tee

Rated Current/Voltage
630A rated current
Maximum voltage 24kV

Conductor Contact
C = Copper
U = Bi-Metallic

Cable insulation range
AA = 13.5 - 17.2mm
B = 18.3 - 21.0mm
D = 23.1 - 27.0mm
F = 27.7 - 32.6mm
H = 34.0 - 39.5mm
A = 16.3 - 19.3mm
C = 20.0 - 24.1mm
E = 24.9 - 28.9mm
G = 30.9 - 36.2mm

Cable Conductor Code
35 = 35mm²
50 = 50 mm²
70 = 70mm²
95 = 95 mm²
120 = 120mm²
150 = 150 mm²
185 = 185mm²
240 = 240 mm²
300 = 300mm²
400 = 400 mm²

Dead-end Plug
P= With dead-end plug
O= Without dead-end plug

Test point
T= With test point
Blank= Without test point

3 = 3-phases Package

Heatshrink Trifurcation Kit

Heatshrink Trifurcation Kit
01 = 35-50mm²
02 = 70-120mm²
03 = 150-240mm²
04 = 300-400mm²

Kit Contents

Item	Description
1	630A short tee body
2	Deadend plug
3	Insulation cap
4	Cable adaptor
5	Conductor contact
6	Stud
7	Earthing wire, silicone grease, cleaning wiper and sand paper
8	Self-fusing insulation tape, semi conductive tape and PVC tape
9	Ruler and installation manual
10	Certificate of qualification

24kV,630A Bushing Tee

Application

For connection of 630A bushing Tee connector to short tee or another bushing tee to supplies multiple branch of cable connection solutions. It can't be connected to 630A type C bushing.

The 630A Short tee can be insulated by the dead-end plug or connects to bushing tee & dead-front surge arrester.

Ordering Information

DTB 624S X X XX X X 3 HS XX

Product Name
630A bushing tee

Rated Current/Voltage
630A rated current
Maximum voltage 24kV

Conductor Contact
C = Copper
U = Bi-Metallic

Cable Insulation Range

AA = 13.5 - 17.2mm	**A** = 16.3 - 19.3mm
B = 18.3 - 21.0mm	**C** = 20.0 - 24.1mm
D = 23.1 - 27.0mm	**E** = 24.9 - 28.9mm
F = 27.7 - 32.6mm	**G** = 30.9 - 36.2mm
H = 34.0 - 39.5mm	

Cable Conductor Code
35 = 35mm^2
50 = 50 mm^2
70 = 70mm^2
95 = 95 mm^2
120 = 120mm^2
150 = 150 mm^2
185 = 185mm^2
240 = 240 mm^2
300 = 300mm^2
400 = 400 mm^2

Dead-end Plug
P = With dead-end plug
O = Without dead-end plug

Test Point
T = With test point
Blank = Without test point

3 = 3-phases Package

Heatshrink Trifurcation kit

Heatshrink Trifurcation Kit
01 = 35-50mm^2
02 = 70-120mm^2
03 = 150-240mm^2
04 = 300-400mm^2

Kit Contents

Item	Description
1	630A bushing tee body
2	Cable adaptor
3	Contact conductor
4	Rod
5	Earthing wire, silicone grease, cleaning wiper and sand paper
6	Self-fusing insulation tape, semi conductive tape and PVC tape
7	Ruler and installation manual
8	Certificate of qualification

Catalog Number

Catalog numbers of 630A dead front short tee with dead end plug, copper conductor contact and test point.

Part Number (Without Heatshrink Trifurcation Kit)	Cable Insulation Range (mm)	Cable Cross Section (mm^2)
DTS624SBC35PT3E	18.3-21.0	35
DTS624SBC50PT3E	18.3-21.0	50
DTS624SCC70PT3E	20.0-24.1	70
DTS624SCC95PT3E	20.0-24.1	95
DTS624SDC120PT3E	23.1-27.0	120
DTS624SEC150PT3E	25.6-29.0	150
DTS624SFC185PT3E	27.7-32.6	185
DTS624SFC240PT3E	27.7-32.6	240
DTS624SGC300PT3E	30.9-36.2	300
DTS624SHC400PT3E	34.0-39.5	400

Note: 1. Please select proper part number based on the cable insulation diameter and take the cable conductor cross section of as a reference.
2. Above catalog numbers are just accommodate to 12/20kV cable.

Catalog numbers of 630A dead front short tee with dead end plug, copper conductor contact.

Part Number (Without Heatshrink Trifurcation Kit)	Cable Insulation Range (mm)	Cable Cross Section (mm^2)
DTS624SBC35P3E	18.3-21.0	35
DTS624SBC50P3E	18.3-21.0	50
DTS624SCC70P3E	20.0-24.1	70
DTS624SCC95P3E	20.0-24.1	95
DTS624SDC120P3E	23.1-27.0	120
DTS624SEC150P3E	25.6-29.0	150
DTS624SFC185P3E	27.7-32.6	185
DTS624SFC240P3E	27.7-32.6	240
DTS624SGC300P3E	30.9-36.2	300
DTS624SHC400P3E	34.0-39.5	400

Note: 1. Please select proper part number based on the cable insulation diameter and take the cable conductor cross section of as a reference.
2. Above catalog numbers are just accommodate to 12/20kV cable.

Catalog numbers of 630A dead front bushing tee with copper conductor contact and test point.

Part Number (Without Heatshrink Trifurcation Kit)	Cable Insulation Range (mm)	Cable Cross Section (mm^2)
DTB624SBC35OT3E	18.3-21.0	35
DTB624SBC50OT3E	18.3-21.0	50
DTB624SCC70OT3E	20.0-24.1	70
DTB624SCC95OT3E	20.0-24.1	95
DTB624SDC120OT3E	23.1-27.0	120
DTB624SEC150OT3E	25.6-29.0	150
DTB624SFC185OT3E	27.7-32.6	185
DTB624SFC240OT3E	27.7-32.6	240
DTB624SGC300OT3E	30.9-36.2	300
DTB624SHC400OT3E	34.0-39.5	400

Note: 1. Please select proper part number based on the cable insulation diameter and take the cable conductor cross section of as a reference.
2. Above catalog numbers are just accommodate to 12/20kV cable.

Catalog numbers of 630A dead front bushing tee with copper conductor contact.

Part Number (Without Heatshrink Trifurcation Kit)	Cable Insulation Range (mm)	Cable Cross Section (mm^2)
DTB624SBC35O3E	18.3-21.0	35
DTB624SBC50O3E	18.3-21.0	50
DTB624SCC70O3E	20.0-24.1	70
DTB624SCC95O3E	20.0-24.1	95
DTB624SDC120O3E	23.1-27.0	120
DTB624SEC150O3E	25.6-29.0	150
DTB624SFC185O3E	27.7-32.6	185
DTB624SFC240O3E	27.7-32.6	240
DTB624SGC300O3E	30.9-36.2	300
DTB624SHC400O3E	34.0-39.5	400

Note: 1. Please select proper part number based on the cable insulation diameter and take the cable conductor cross section of as a reference.
2. Above catalog numbers are just accommodate to 12/20kV cable.

Application

Application of 24kV 630A short tee and bushing tee in the RMU

(all dimensions are in mm)

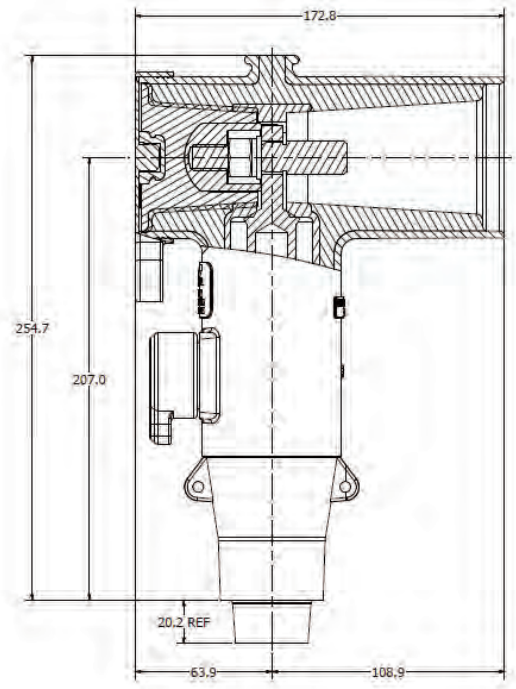

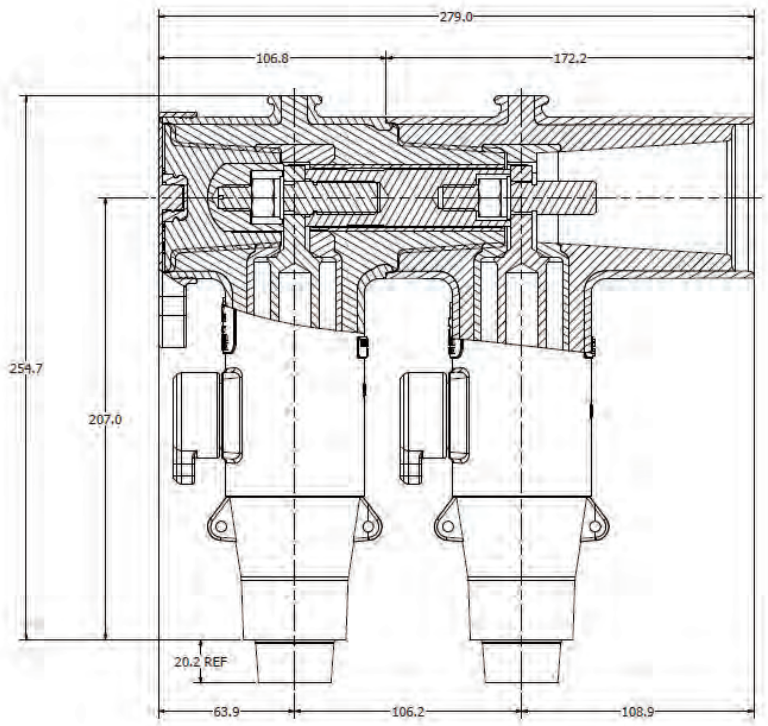

IEC Separable Connector

36kV,630A Asymmetrical Tee Connector

36kV,630A Compact Separable Connector

Outline

Description	Page
Summary	27
Electrical Rating	28
Features and Detailed Description	28
24kV,630A Compact Short Tee	29
24kV,630A Compact Bushing Tee	30
Catalog Number	31
Ordering Information	32

5

36kV,630A Compact Separable Connector

Application

- For connection of extruded polymeric cable to transformers, switchgear, sectionalizing cabinets with a premoulded 630A separable connector.
- For indoor and outdoor installations.
- System voltage up to 36kV(applicable to 20kV unearthed system).
- Continuous current 630A (900A overload current for 8 hours).
- Cable particulars:
  - Extruded polymeric cable (XLPE, EPR, etc).
  - Copper or aluminum conductors.
  - Conductor size: 18/30 kV cable 35-300mm^2.

Performance

- Provides a fully screened and fully submersible separable connection when mated with the proper bushing or plug meet the requirements of EN50180/EN50181-DIN47636/HN52-S-61.
- Built-in capacitive test point allows for an easy check of circuit status or installation of a fault indicator.
- No minimum phase clearance requirements.
- Mounting can be vertical, horizontal, or any angle in between.

Standards

Meets the requirements of GB/T 12706.4-2016, IEC 60502-4:2010, VDE 0278, EDF, HN 52-S-61, BS 2715.

Installation

- No special tools are required.
- Connector may be energized immediately after installation on its mating part.
- Mates with bushings, plugs, and junction devices complying with interface C per EN50180/EN50181 DIN47636/HN52-S-61.

Quality Assurance

- Our manufacturing facility is registered to ISO 9001-2000 by third party audit.
- Electrical routine test.
- X-ray test.

Packing

Carton packaging, weight about 3kg(single phase package).

Electrical Ratings

	DTS 636	DTB 636
Maximum system voltage (Um)	36kV	36kV
Impulse	170 kV	170 kV
AC withstand (5 min.)	81kV	81kV
Continuous current	630A	630A
Short circuit withstand, 1s,(rms sym)	35kA	35kA
Partial discharge	≤10pC @ 30kV	≤10pC @ 30kV
Dynamic current	40 kA/0.2S	40 kA/0.2S

Features and Detailed Description

1. Clamping Screw
Tin-plated copper clamping screw secures the conductor contact to the bushing.

2. Insulation
Moulded EPDM insulating rubber is formulated and mixed in-house to ensure high quality.

3. Basic Insulating Plug
Moulded epoxy part has a threaded metal insert to accept the clamping screw.

4. Capacitive Test Point
Capacitive test point provides a means to check circuit status.

5. Rubber Cap
Moulded EPDM conducting rubber cap protects and earths the test point during normal operation, includes pulling eye.

6. Internal Screen
Moulded EPDM conducting rubber screen controls electrical stress.

7. Capacitive Test Point (Optional)
Capacitive test point provides means to check circuit status.

8. Stress Relief
The configuration of the outer screen and insulation provides cable stress relief.

9. Cable Adaptor
The sized opening provides an interference fit to maintain a watertight seal and provides the initial cable stress relief.

10. Earthing Eye
Moulded into the external screen for connection of an earthing wire.

11. External Screen
Moulded EPDM conducting rubber mates with the cable screen to maintain screen continuity and ensure that the assembly is at earth potential.

12. Conductor Contact
Supplies bimetallic and copper conductor contact to accommodate different cable conductor type.

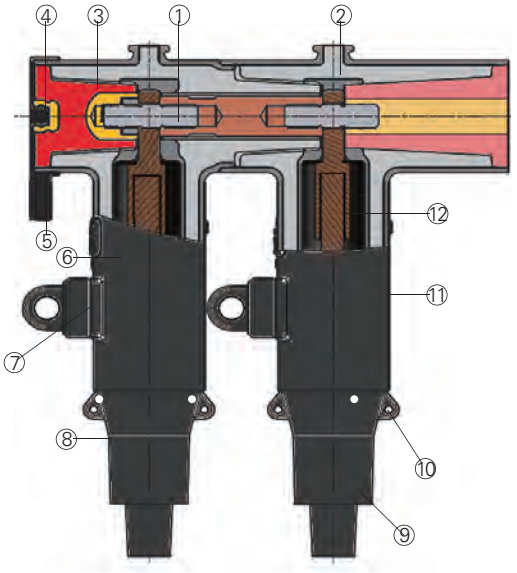

IEC Separable Connector

36kV,630A Asymmetrical Tee Connector

36kV,630A Compact Short Tee

Application

For connection of extruded polymeric cable to transformers, switchgear, motors and other equipment with a premoulded 630A Short Tee connector which mates with bushings and junction devices complying with interface C per CENELEC 50180/50181 and DIN47636/HN52-S-61.

The 630A Short tee can be insulated by the dead-end plug or connects to bushing tee & dead-front surge arrester.

Ordering Information

DTS 636 X X XX X X 3

Product Name
630A asymmetric short tee

Rated Current/Voltage
630A rated current,
Maximum voltage 36kV

Cable Insulation Range
AA = 13.5 - 17.2mm
A = 16.3 - 19.3mm
B = 18.3 - 21.0mm
C = 20.0 - 24.1mm
D = 23.1 - 27.0mm
E = 25.6 – 29mm
F = 27.7 - 32.6mm
G = 30.9 - 36.2mm
H = 34.0 - 39.5mm

Conductor Contact
C = Copper
U = Bi-Metallic

Cable Conductor Code
35 = 35mm^2
50 = 50 mm^2
70 = 70mm^2
95 = 95 mm^2
120 = 120mm^2
150 = 150 mm^2
185 = 185mm^2
240 = 240 mm^2
300 = 300mm^2

Dead-end Plug
P = With dead-end plug
O = Without dead-end plug

Test Point
T = With test point
Blank = Without test point

3 = 3-phases Package

Kit Contents

Item	Description
1	630A short tee body
2	Deadend plug
3	Insulation cap
4	Cable adaptor
5	Conductor contact
6	Stud
7	Earthing wire, silicone grease, cleaning wiper and sand paper
8	Self-fusing insulation tape, semi conductive tape and PVC tape
9	Ruler and installation manual
10	Certificate of qualification

36kV,630A Compact Bushing Tee

Application

For connection of 630A bushing Tee connector to short tee or another bushing tee to supply multiple branch of cable connection solutions. It can't be connected to 630A type C bushing.

The 630A Short tee can be insulated by the dead-end plug or connects to bushing tee & dead-front surge arrester.

Ordering Information

DTB 636 X X XX X X 3

Product Name
630A bushing tee

Rated Current/Voltage
630A rated current,
Maximum voltage 36kV

Cable Insulation Range
AA = 13.5 - 17.2mm
B = 18.3 - 21.0mm
D = 23.1 - 27.0mm
F = 27.7 - 32.6mm
H = 34.0 - 39.5mm
A = 16.3 - 19.3mm
C = 20.0 - 24.1mm
E = 24.9 - 28.9mm
G = 30.9 - 36.2mm

Conductor Contact
C = Copper
U = Bi-Metallic

Cable Conductor Code
35 = 35mm^2
50 = 50 mm^2
70 = 70mm^2
95 = 95 mm^2
120 = 120mm^2
150 = 150 mm^2
185 = 185mm^2
240 = 240 mm^2
300 = 300mm^2

Dead-end Plug
P = With dead-end plug
O = Without dead-end plug

Test Point
T = With test point
Blank = Without test point

3 = 3-phases Package

Kit Contents

Item	Description
1	630A bushing tee body
2	Cable adaptor
3	Contact conductor
4	Rod
5	Earthing wire, silicone grease, cleaning wiper and sand paper
6	Self-fusing insulation tape, semi conductive tape and PVC tape
7	Ruler and installation manual
8	Certificate of qualification

Catalog Number

Catalog numbers of 630A dead front short tee with dead end plug, copper conductor contact and test point.

Part Number	Cable Insulation Range (mm)	Cable Cross Section (mm^2)	Heat Shrink Trifurcation Kit (Optional)
DTS636DC35PT3E	23.1-27.0	35	HS21
DTS636DC50PT3E	23.1-27.0	50	HS21
DTS636EC70PT3E	25.6-29.0	70	HS22
DTS636FC95PT3E	27.7-32.6	95	HS22
DTS636FC120PT3E	27.7-32.6	120	HS22
DTS636GC150PT3E	30.9-36.2	150	HS23
DTS636GC185PT3E	30.9-36.2	185	HS23
DTS636HC240PT3E	34.0-39.5	240	HS23
DTS636HC300PT3E	34.0-39.5	300	HS24

Note: 1. Please select proper part number based on the cable insulation diameter and take the cable conductor cross section of as a reference.
2. Above catalog numbers are just accommodate to 18/30(36)kV cable.

Catalog numbers of 630A dead front short tee with dead end plug, copper conductor contact.

Part Number	Cable Insulation Range (mm)	Cable Cross Section (mm^2)	Heat Shrink Trifurcation Kit (Optional)
DTS636DC35P3E	23.1-27.0	35	HS21
DTS636DC50P3E	23.1-27.0	50	HS21
DTS636EC70P3E	25.6-29.0	70	HS22
DTS636FC95P3E	27.7-32.6	95	HS22
DTS636FC120P3E	27.7-32.6	120	HS22
DTS636GC150P3E	30.9-36.2	150	HS23
DTS636GC185P3E	30.9-36.2	185	HS23
DTS636HC240P3E	34.0-39.5	240	HS23
DTS636HC300P3E	34.0-39.5	300	HS24

Note: 1. Please select proper part number based on the cable insulation diameter and take the cable conductor cross section of as a reference.
2. Above catalog numbers are just accommodate to 18/30(36)kV cable.

Catalog numbers of 630A dead front bushing tee with copper conductor contact and test point.

Part Number	Cable Insulation Range (mm)	Cable Cross Section (mm^2)	Heat Shrink Trifurcation Kit (Optional)
DTB636DC35OT3E	23.1-27.0	35	HS21
DTB636DC50OT3E	23.1-27.0	50	HS21
DTB636EC70OT3E	25.6-29.0	70	HS22
DTB636FC95OT3E	27.7-32.6	95	HS22
DTB636FC120OT3E	27.7-32.6	120	HS22
DTB636GC150OT3E	30.9-36.2	150	HS23
DTB636GC185OT3E	30.9-36.2	185	HS23
DTB636HC240OT3E	34.0-39.5	240	HS23
DTB636HC300OT3E	34.0-39.5	300	HS24

Note: 1. Please select proper part number based on the cable insulation diameter and take the cable conductor cross section of as a reference.
2. Above catalog numbers are just accommodate to 18/30(36)kV cable.

Catalog numbers of 630A dead front bushing tee with copper conductor contact.

Part Number	Cable Insulation Range (mm)	Cable Cross Section (mm^2)	Heat Shrink Trifurcation Kit (Optional)
DTB636DC35O3E	23.1-27.0	35	HS21
DTB636DC50O3E	23.1-27.0	50	HS21
DTB636EC70O3E	25.6-29.0	70	HS22
DTB636FC95O3E	27.7-32.6	95	HS22
DTB636FC120O3E	27.7-32.6	120	HS22
DTB636GC150O3E	30.9-36.2	150	HS23
DTB636GC185O3E	30.9-36.2	185	HS23
DTB636HC240O3E	34.0-39.5	240	HS23
DTB636HC300O3E	34.0-39.5	300	HS24

Note: 1. Please select proper part number based on the cable insulation diameter and take the cable conductor cross section of as a reference.
2. Above catalog numbers are just accommodate to 18/30(36)kV cable.

Application

Application of 36kV 630A short tee and bushing tee in the RMU

(all dimensions are in mm)

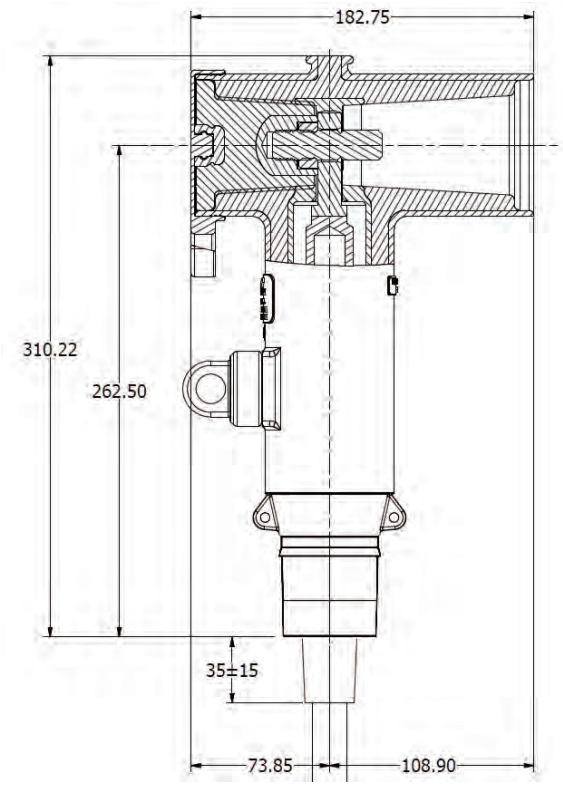

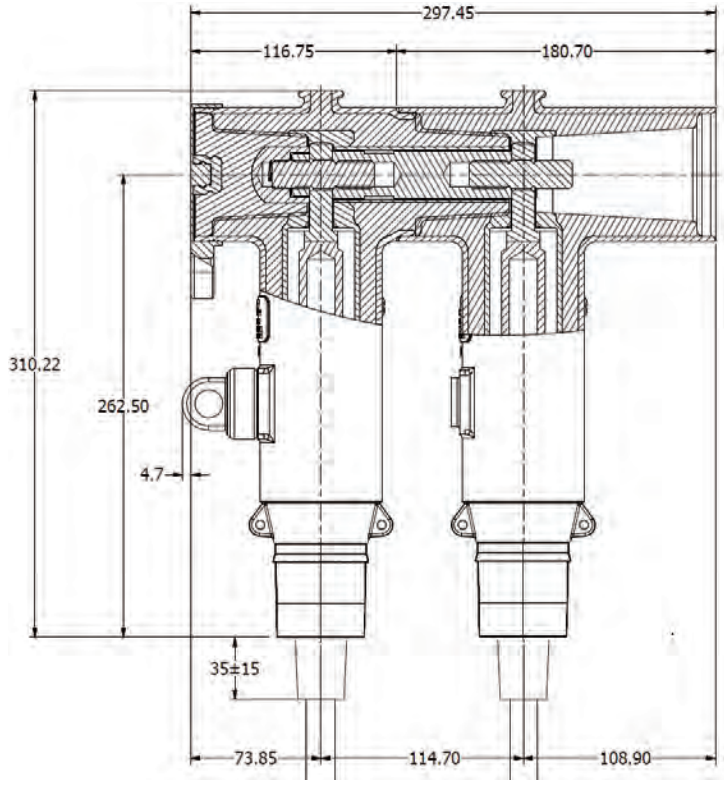

IEC Separable Connector

36kV,630A Symmetrical Tee Connector

36kV,630A Dead-break Symmetrical Tee Connector

Outline

Description	Page
Summary	33
Electrical Rating	34
Features and Detailed Description	34
Dimensional Drawing	35
Catalog Number	35
Ordering Information	36

6

36kV,630A Dead-break Symmetrical Tee Connector

Application

- For connection of extruded polymeric cable to transformers, switchgear, sectionalizing cabinets with a premoulded 630A separable connector.
- For indoor and outdoor installations.
- System voltage up to 36kV.
- Continuous current 630A (900A overload current for 8 hours).
- Cable particulars:
  - Extruded polymeric cable (XLPE, EPR, etc).
  - Copper or aluminum conductors.
  - Conductor size: 18/30 kV cable 35-300mm^2
    12/20kV cable 35-400mm^2.

Performance

- Provides a fully screened and fully submersible separable connection when mated with the proper bushing or plug meet the requirements of EN50180/EN50181-DIN47636/HN52-S-61.
- Built-in capacitive test point allows for an easy check of circuit status or installation of a fault indicator.
- No minimum phase clearance requirements.
- Mounting can be vertical, horizontal, or any angle in between.

Standards

Meets the requirements of GB/T 12706.4-2016, IEC 60502-4:2010, VDE 0278, EDF, HN 52-S-61, BS 2715.

Installation

- No special tools are required.
- Connector may be energized immediately after installation on its mating part.
- Mates with bushings, plugs, and junction devices complying with interface C per EN50180/EN50181 DIN47636/HN52-S-61.

Quality Assurance

- Our manufacturing facility is registered to ISO 9001-2000 by third party audit.
- Electrical routine test.
- X-ray test.

Packing

Carton packaging, weight about 3kg (single phase package).

Electrical Ratings

	DT400	DT436
Maximum system voltage (Um)	24kV	36kV
Impulse	125 kV	170 kV
AC withstand (5 min.)	54kV	81kV
Continuous current	630A	630A
Overload current(8h)	900A	900A
Short circuit withstand, 1s,(rms sym)	35kA	35kA

Features and Detailed Description

1. Clamping Screw
Tin-plated copper clamping screw secures the conductor contact to the bushing.

2. Insulation
Moulded EPDM insulating rubber is formulated and mixed in-house to ensure high quality.

3. Basic Insulating Plug
Moulded epoxy part has a threaded metal insert to accept the clamping screw.

4. Capacitive Test Point
Capacitive test point provides a means to check circuit status.

5. Rubber Cap
Moulded EPDM conducting rubber cap protects and earths the test point during normal operation, includes pulling eye.

6. Internal Screen
Moulded EPDM conducting rubber screen controls electrical stress.

7. Capacitive Test Point(Optional)
Capacitive test point provides means to check circuit status.

8. Stress Relief
The configuration of the outer screen and insulation provides cable stress relief.

9. Cable Adaptor
The sized opening provides an interference fit to maintain a watertight seal and provides the initial cable stress relief.

10. Earthing Eye
Moulded into the external screen for connection of an earthing wire.

11. External Screen
Moulded EPDM conducting rubber mates with the cable screen to maintain screen continuity and ensure that the assembly is at earth potential.

12. Conductor Contact
Supplies bimetallic and copper conductor contact to accommodate different cable conductor type.

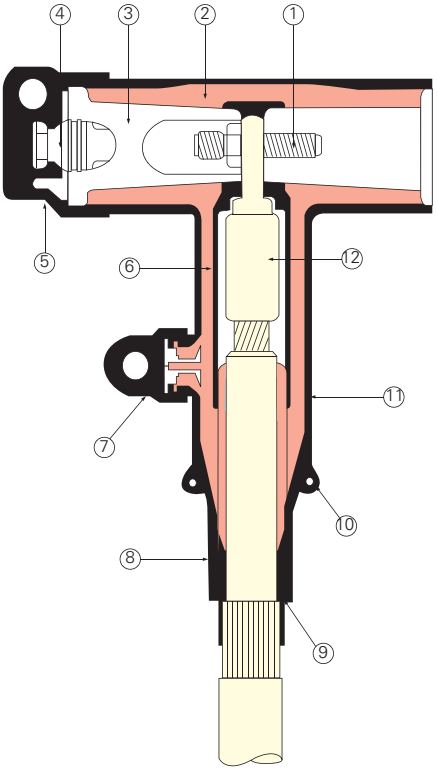

IEC Separable Connector

36kV,630A Symmetrical Tee Connector

Dimensional Information

(all dimensions are in mm)

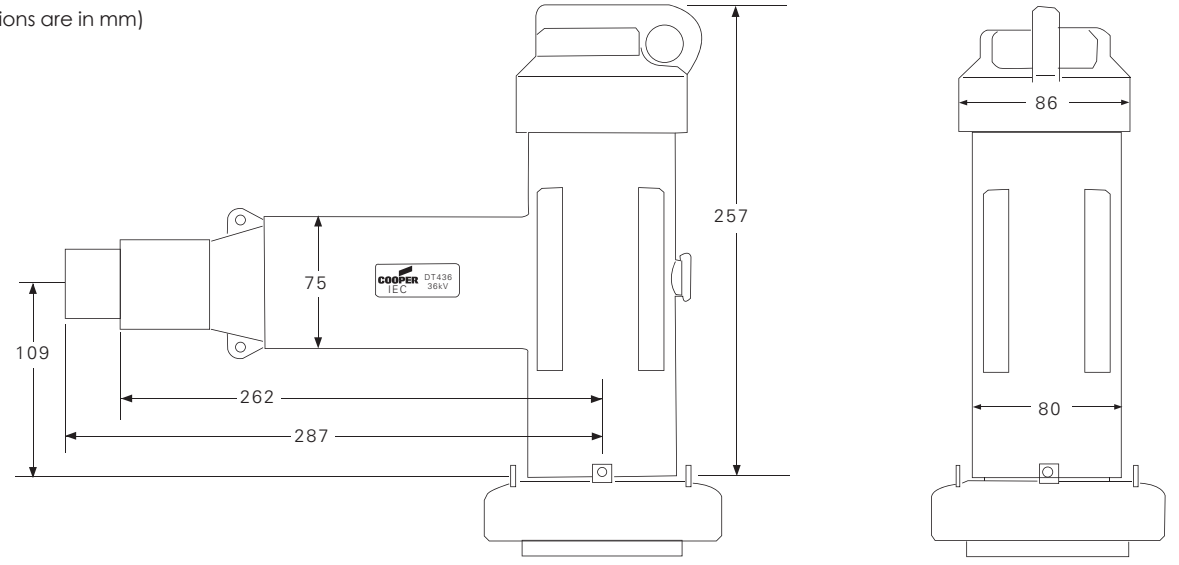

Ordering Information

DT XXX X C XXX

Product Name	Rated Voltage	Cable Insulation Range	Conductor Contact	Cable Conductor Code
630A symmetrical tee	**400** = 24 kV **436** = 36 kV	**A** = 16.3 ~ 19.3 mm **B** = 18.3 ~ 21.0 mm **C** = 20.0 ~ 24.1 mm **D** = 23.1 ~ 27.0 mm **E** = 25.6 ~ 29mm **F** = 27.7 ~ 32.6 mm **G** = 30.9 ~ 36.2 mm **H** = 34.0 ~ 39.5 mm	Copper conductor contact	**25** = 25 mm^2 **35** = 35 mm^2 **50** = 50 mm^2 **70** = 70 mm^2 **95** = 95 mm^2 **120** = 120 mm^2 **150** = 150 mm^2 **185** = 185 mm^2 **240** = 240 mm^2 **300** = 300 mm^2 **400** = 400 mm^2

Catalog Number

According the insulation diameter of the 12/20kV cable meet the IEC Standards, we recommend part numbers of the 630A symmetrical Tee as in below table

Part Number	Cable Cross Section (mm^2)	Cable Insulation Range (mm)
DT400BC35E	35	18.3-21.0
DT400BC50E	50	18.3-21.0
DT400CC70E	70	20.0-24.1
DT400CC95E	95	20.0-24.1
DT400DC120E	120	23.1-27.0
DT400EC150E	150	24.9-28.9
DT400FC185E	185	27.7-32.6
DT400FC240E	240	27.7-32.6
DT400GC300E	300	30.9-36.2
DT400HC400E	400	34.0-39.5

According the insulation diameter of the 18/30kV cable meet the IEC Standards, we recommend part numbers of the 630A symmetrical Tee as in below table

Part Number	Cable Cross Section (mm^2)	Cable Insulation Range (mm)
DT436DC35E	35	23.1-27.0
DT436DC50E	50	23.1-27.0
DT436EC70E	70	24.9-28.9
DT436FC95E	95	27.7-32.6
DT436FC120E	120	27.7-32.6
DT436FC150E	150	27.7-32.6
DT436GC185E	185	30.9-36.2
DT436GC240E	240	30.9-36.2
DT436HC300E	300	34.0-39.5

IEC Separable Connector

42kV,1250A Separable Connector

42kV,1250A Separable Tee Connector

Outline

Description	Page
Summary	37
Electrical Rating	38
Features and Detailed Description)	38
42kV,1250A Short Tee	39
42kV,1250A Bushing Tee	40
Catalog Number	41
Application	42

42kV,1250A Separable Connector

7

Application

- For connection of extruded polymeric cable to transformers, switchgear, sectionalizing cabinets with a premoulded 1250A separable connector.
- For indoor and outdoor installations.
- System voltage up to 42kV.
- Continuous current 1250A.
- Cable particulars:
  - Extruded polymeric cable (XLPE, EPR, etc).
  - Copper or aluminum conductors.
  - Conductor size: 26/35 kV cable 50 - 800mm^2.

Performance

- Provides a fully screened and fully submersible separable connection when mated with the proper bushing or plug meet the requirements of EN50180/EN50181-DIN47636/HN52-S-61.
- Built-in capacitive test point allows for an easy check of circuit status or installation of a fault indicator.
- No minimum phase clearance requirements.
- Mounting can be vertical, horizontal, or any angle in between.

Standards

Meets the requirements of GB/T 12706.4-2016, IEC 60502-4:2010, VDE 0278, EDF, HN 52-S-61, BS 2715.

Installation

- No special tools are required.
- Connector may be energized immediately after installation on its mating part.
- Mates with bushings, plugs, and junction devices complying with interface C per EN50180/EN50181 DIN47636/HN52-S-61.

Quality Assurance

- Our manufacturing facility is registered to ISO 9001-2000 by third party audit.
- Electrical routine test.
- X-ray test.

Packing

Single and three phase package.

Electrical Ratings

	DTS1242	DTB1242
Maximum system voltage (Um)	42kV	42kV
Impulse	200kV	200kV
AC withstand (5 min.)	117kV	117kV
Continuous current	1250A	1250A
Partial discharge	≤2pC @ 45kV	≤2pC @ 45kV

Features and Detailed Description

1. Clamping Screw
Tin-plated copper clamping screw secures the conductor contact to the bushing.

2. Insulation
Moulded EPDM insulating rubber is formulated and mixed in-house to ensure high quality.

3. Basic Insulating Plug
Moulded epoxy part has a threaded metal insert to accept the clamping screw.

4. Capacitive Test Point
Capacitive test point provides a means to check circuit status.

5. Rubber Cap
Moulded EPDM conducting rubber cap protects and earths the test point during normal operation, includes pulling eye.

6. Internal Screen
Moulded EPDM conducting rubber screen controls electrical stress.

7. Capacitive Test Point(Optional)
Capacitive test point provides means to check circuit status.

8 . Stress Relief
The configuration of the outer screen and insulation provides cable stress relief.

9. Cable Adaptor
The sized opening provides an interference fit to maintain a watertight seal and provides the initial cable stress relief.

10. Earthing Eye
Moulded into the external screen for connection of an earthing wire.

11. External Screen
Moulded EPDM conducting rubber mates with the cable screen to maintain screen continuity and ensure that the assembly is at earth potential.

12. Conductor Contact
Supplies bimetallic and copper conductor contact to accommodate different cable conductor type.

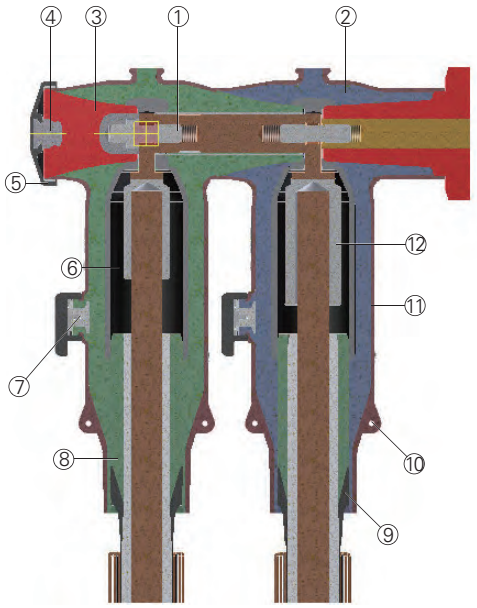

IEC IEC Separable Connector

42kV,1250A Separable Connector

42kV,1250A Compact Short Tee

Application

For connection of extruded polymeric cable to transformers, switchgear, motors and other equipment with a premoulded 630A Short Tee connector which mates with bushings and junction devices complying with interface C per CENELEC 50180/50181 and DIN47636/HN52-S-61.

The 1250A Short tee can be insulated by the dead-end plug or connects to bushing tee & dead-front surge arrester.

Ordering Information

7

DTS 1242 X X XX X X 3

Product Name
1250A asymmetric short tee

Rated Current/Voltage
1250A rated current,
Maximum voltage 42kV

Cable Insulation Range

A = 28.2 - 32.3mm	**E** = 40.1 - 44.8mm
B = 31.1 - 35.7mm	**F** = 42.9 - 47.9mm
C = 35.0 - 39.1mm	**G** = 46.5 - 51.9mm
D = 37.2 - 41.6mm	**H** = 50.0 - 56.0mm

Conductor Contact
C = Copper(50mm^2 - 400mm^2)
U = Bi-Metallic(50mm^2 - 800mm^2)

Cable Conductor Code

50 = 50mm^2	**240** = 240mm^2
70 = 70mm^2	**300** = 300mm^2
95 = 95mm^2	**400** = 400mm^2
120 = 120mm^2	**500** = 500mm^2
150 = 150mm^2	**630** = 630mm^2
185 = 185mm^2	**800** = 800mm^2

Dead-end Plug
P = With dead-end plug
O = Without dead-end plug

Test Point
T = With test point
Blank = Without test point

3 = 3-Phases Package

Kit Contents

Item	Description
1	1250A short tee body
2	Deadend plug
3	Insulation cap
4	Cable adaptor
5	Conductor contact
6	Stud
7	Earthing wire, silicone grease, cleaning wiper and sand paper
8	Self-fusing insulation tape, semi conductive tape and PVC tape
9	Ruler and installation manual
10	Certificate of qualification

42kV,1250A Compact Bushing Tee

Application

For connection of 630A bushing Tee connector to short tee or another bushing tee to supply multiple branch of cable connection solutions. It can't be connected to 630A type C bushing.

The 1250A Short tee can be insulated by the dead-end plug or connects to bushing tee & dead-front surge arrester.

Ordering Information

DTB 1242 X X XX X X 3

Product Name
1250A bushing tee

Rated Current/Voltage
1250A rated current,
Maximum voltage 42kV

Cable Insulation Range

A = 28.2 - 32.3mm	**E** = 40.1 - 44.8mm
B = 31.1 - 35.7mm	**F** = 42.9 - 47.9mm
C = 35.0 - 39.1mm	**G** = 46.5 - 51.9mm
D = 37.2 - 41.6mm	**H** = 50.0 - 56.0mm

Conductor Contact
C = Copper(50mm^2 - 400mm^2)
U = Bi-Metallic(50mm^2 - 800mm^2)

Cable Conductor Code

50 = 50mm^2	**240** = 240mm^2
70 = 70mm^2	**300** = 300mm^2
95 = 95mm^2	**400** = 400mm^2
120 = 120mm^2	**500** = 500mm^2
150 = 150mm^2	**630** = 630mm^2
185 = 185mm^2	**800** = 800mm^2

Dead-end Plug
P = With dead-end plug
O = Without dead-end plug

Test Point
T = With test point
Blank = Without test point

3-phases Package

Kit Contents

Item	Description
1	1250A bushing tee body
2	Cable adaptor
3	Contact conductor
4	Rod
5	Earthing wire, silicone grease, cleaning wiper and sand paper
6	Self-fusing insulation tape, semi conductive tape and PVC tape
7	Ruler and installation manual
8	Certificate of qualification

Catalog Number

Catalog numbers of 630A dead front short tee with dead end plug, Bi-metallic conductor contact and test point and test point.

Part Number	Cable Insulation Range (mm)	Cable Cross Section (mm^2)
DTS1242AU50PT3E	28.2-32.3	50
DTS1242BU70PT3E	31.1-35.7	70
DTS1242BU95PT3E	31.1-35.7	95
DTS1242BU120PT3E	31.1-35.7	120
DTS1242CU150PT3E	35.0-39.1	150
DTS1242CU185PT3E	35.0-39.1	185
DTS1242DU240PT3E	37.2-41.6	240
DTS1242EU300PT3E	40.1-44.8	300
DTS1242FU400PT3E	42.9-47.9	400
DTS1242GU500PT3E	46.5-51.9	500
DTS1242HU630PT3E	50.0-56.0	630

Note: 1. Please select proper part number based on the cable insulation diameter and take the cable conductor cross section of as a reference.
2. Above catalog numbers are just accommodate to 26/35(40.5)kV cable.

Catalog numbers of 1250A dead front short tee with dead end plug and Bi-metallic conductor contact

Part Number	Cable Insulation Range (mm)	Cable Cross Section (mm^2)
DTS1242AU50P3E	28.2-32.3	50
DTS1242BU70P3E	31.1-35.7	70
DTS1242BU95P3E	31.1-35.7	95
DTS1242BU120P3E	31.1-35.7	120
DTS1242CU150P3E	35.0-39.1	150
DTS1242CU185P3E	35.0-39.1	185
DTS1242DU240P3E	37.2-41.6	240
DTS1242EU300P3E	40.1-44.8	300
DTS1242FU400P3E	42.9-47.9	400
DTS1242GU500P3E	46.5-51.9	500
DTS1242HU630P3E	50.0-56.0	630

Note: 1. Please select proper part number based on the cable insulation diameter and take the cable conductor cross section of as a reference.
2. Above catalog numbers are just accommodate to 26/35(40.5)kV cable.

Catalog numbers of 630A dead front bushing tee with Bi-metallic conductor contact and test point and test point.

Part Number	Cable Insulation Range (mm)	Cable Cross Section (mm^2)
DTB1242AU50OT3E	28.2-32.3	50
DTB1242BU70OT3E	31.1-35.7	70
DTB1242BU95OT3E	31.1-35.7	95
DTB1242BU120OT3E	31.1-35.7	120
DTB1242CU150OT3E	35.0-39.1	150
DTB1242CU185OT3E	35.0-39.1	185
DTB1242DU240OT3E	37.2-41.6	240
DTB1242EU300OT3E	40.1-44.8	300
DTB1242FU400OT3E	42.9-47.9	400
DTB1242GU500OT3E	46.5-51.9	500
DTB1242HU630OT3E	50.0-56.0	630

Note: 1. Please select proper part number based on the cable insulation diameter and take the cable conductor cross section of as a reference.
2. Above catalog numbers are just accommodate to 26/35(40.5)kV cable.

Catalog numbers of 630A dead front bushing tee with Bi-metallic conductor contact and test point and test point.

Part Number	Cable Insulation Range (mm)	Cable Cross Section (mm^2)
DTB1242AU50O3E	28.2-32.3	50
DTB1242BU70O3E	31.1-35.7	70
DTB1242BU95O3E	31.1-35.7	95
DTB1242BU120O3E	31.1-35.7	120
DTB1242CU150O3E	35.0-39.1	150
DTB1242CU185O3E	35.0-39.1	185
DTB1242DU240O3E	37.2-41.6	240
DTB1242EU300O3E	40.1-44.8	300
DTB1242FU400O3E	42.9-47.9	400
DTB1242GU500O3E	46.5-51.9	500
DTB1242HU630O3E	50.0-56.0	630

Note: 1. Please select proper part number based on the cable insulation diameter and take the cable conductor cross section of as a reference.
2. Above catalog numbers are just accommodate to 26/35(40.5)kV cable.

Application:

Application of 42kV 1250A short tee and bushing tee in the switchgear cabinet

(all dimensions are in mm)

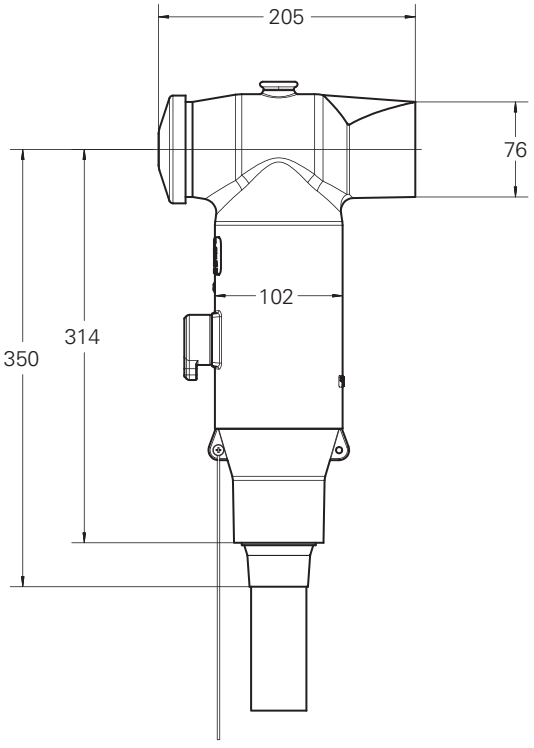

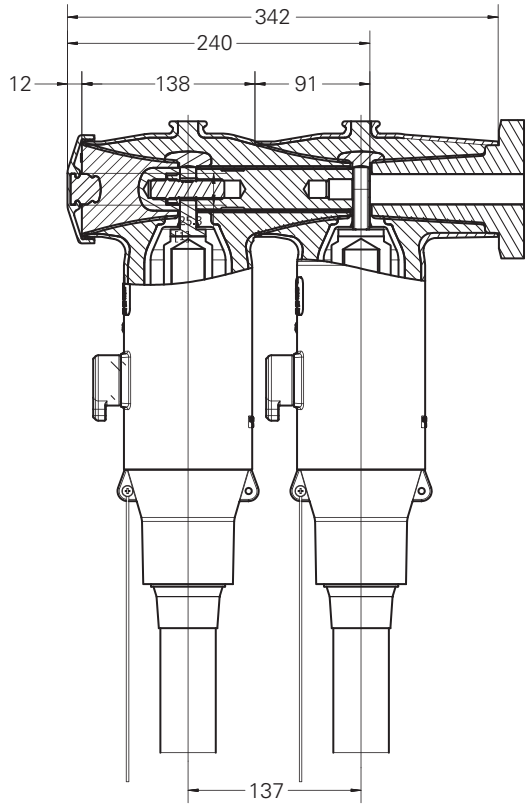

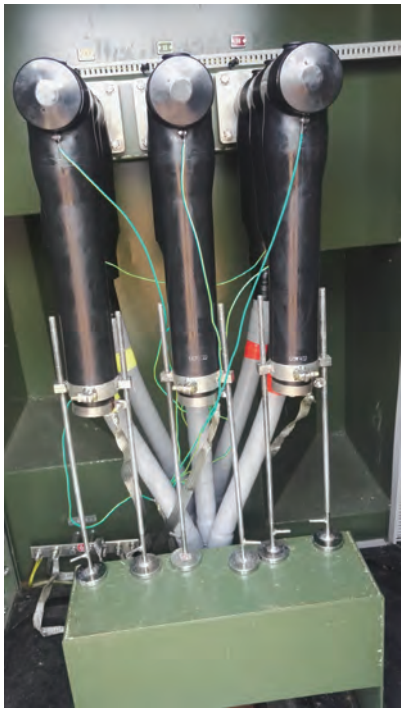

IEC Separable Connector

630A Bushing

630A Bushing

630A Bushing

Application

- Used in the oil insulation devices. For example, Switchgear, transformer and capacitor.
- System voltage 24kV,36kV and 40.5kV.
- Continuous current 630A.
- For indoor and outdoor installations.
- Mounting can be vertical or horizontal

Standards

- Meet the requirements of Type C bushing in EN50180/EN50181 and CENELEC HD506S1.
- Verified according to IEC60502-4 and CENELEC HD629.1 51.

Quality assurance

- AC withstand and PD routine test.
- X-Ray test.

Electrical Ratings

8

	DB630-24	DB630-36	DB630-40.5
Maximum system voltage (um)	24kV	36kV	40.5kV
Impulse	125kV	170kV	200kV
AC withstand (5 min.)	54kV	81kV	95kV
Continuous current	630A	630A	630A
Overload current, (up to 8h)	900A	900A	900A
Short circuit withstand, 2s	15kA	15kA	15kA

Ordering Information

- DB630-24 apply to 24kV system
- DB630-36 apply to 36kV system
- DB630-40.5 apply to 40.5kV system

all the clamp kit need to order separately

Clamp kit

Clamp Kit and Standard	Part Number
DIN 42538	BC-D-40.5-630

Dimensional Information

(all dimensions are in mm)

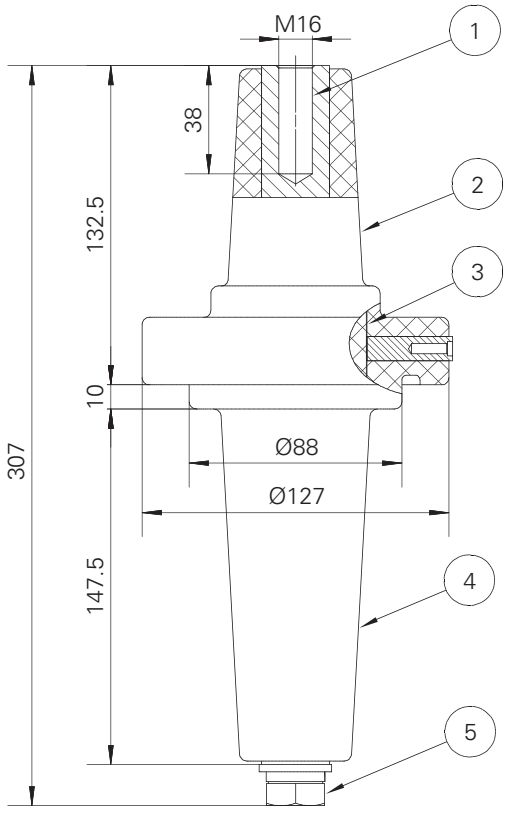

1. Bolt Connection
M16 bolt.

2. Interface
The interface fit between the cable accessories and the bushing can avoid humidity and pollution entrance.

3. Internal Screen
Special designed internal screen can control and adjust the electrical field intensity. It have a grounding eye located on the bushing out surface.

4. Molded Epoxy Insulation

5. Conductor
Copper conductor current carrying path with a M16 bolt to realize apparatus connection。

17kv Fully Shielded Deadfront Surge Arrester

17kv Fully Shielded Deadfront Surge Arrester

The 17kV deadfront surge arrester combines metal (zinc) oxide varistor technology in a premolded rubber Bushing Tee to provide overvoltage system protection in an insulated, fully shielded, submersible, deadfront device.

The arrester housing interface conforms to Cooper 17.5kV Bushing Tee Specification. The arrester housing is molded of EPDM insulating rubber, which provides deadfront safety in a transformer or cabinet.17kV deadfront surge arresters are used on underground systems in transformerand entry cabinets, vaults, switching enclosuresand other installations to provide shielded deadfront arrester protection.

Standards

- The 17kV Deadfront Surge Arrester complies with the latest revisions of IEC 60099-4 Metal Oxide surge arresters without gaps for A.C. systems.

Operating Conditions

- Ambient temperature: -40℃~+65℃
- Power frequency: 48~62Hz
- The voltage between arrester terminals should not exceed the MCOV

Electrical Ratings

Description	Unit	17/50kv Fully Shielded Deadfront Surge Arrester	17/45kv Fully Shielded Deadfront Surge Arrester
Part number		DAI630TB1750CN	DAI630TB（S）1745CN
Nominal discharge current	kA	5kA	5kA
Rated voltage rating	(r.m.s) kV	17	17
Lighting impulse residual voltage	kV peak	≤50	≤45
MCOV	(r.m.s) kV	13.6	13.6
DC 1mA reference voltage test	kV	≥25	≥24
20 current surges of 150A crest for 2ms rectangular wave duration	A	150	150
High-current, 4/10μs short-duration discharge	kA	65	65
Application		Distribution class	Station class

Ordering Information

17kV Fully Shielded Deadfront Surge Arrester mates with 17.5kV Short Tee

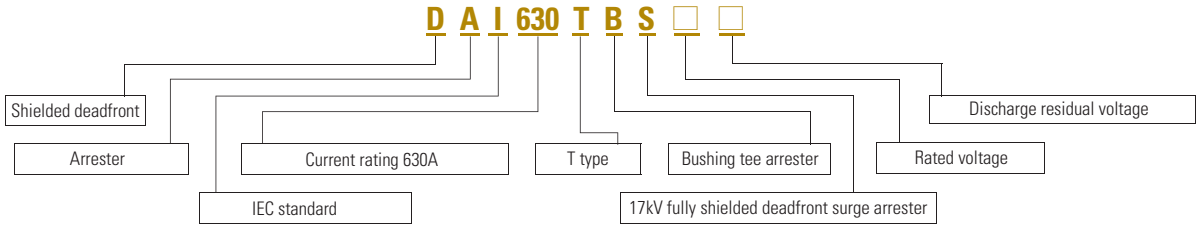

17kV Fully Shielded Deadfront Surge Arrester Mates With 24kV Short Tee

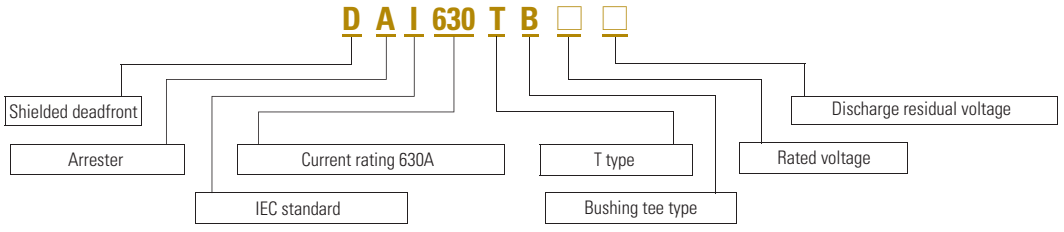

Packing Information

- Arrester body
- Rod
- Silicone grease
- Wiper
- Installation manual

TOV Curve at 85°C

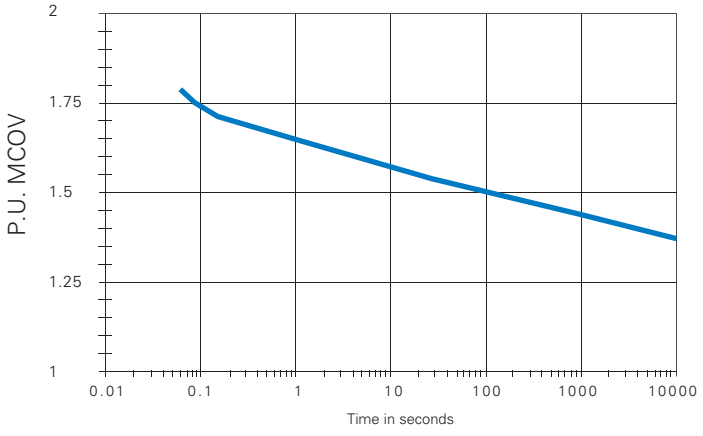

IEC Separable Connector

Fully Shielded Deadfront Surge Arrester for 10kV Grid System

Customer Instructions

Preventive test shall be applied to surge arrester before energized or after 1 year running.

Test items as below:

- DC 1mA reference voltage. Both end of the surge arrester applies DC voltage, when the current flows the arrester stabilize at 1mA, the voltage displayed should not less than 95% of the value give out by the manufacture.
- Leakage current test: Applies 0.75 times of the DC 1mA reference voltage on both end of the surge arrester, the current flows the arrester measured shall not bigger than 50μA.
- AC Withstand test and discharge test are forbidden.

Dimensional Information

(all dimensions are in mm)

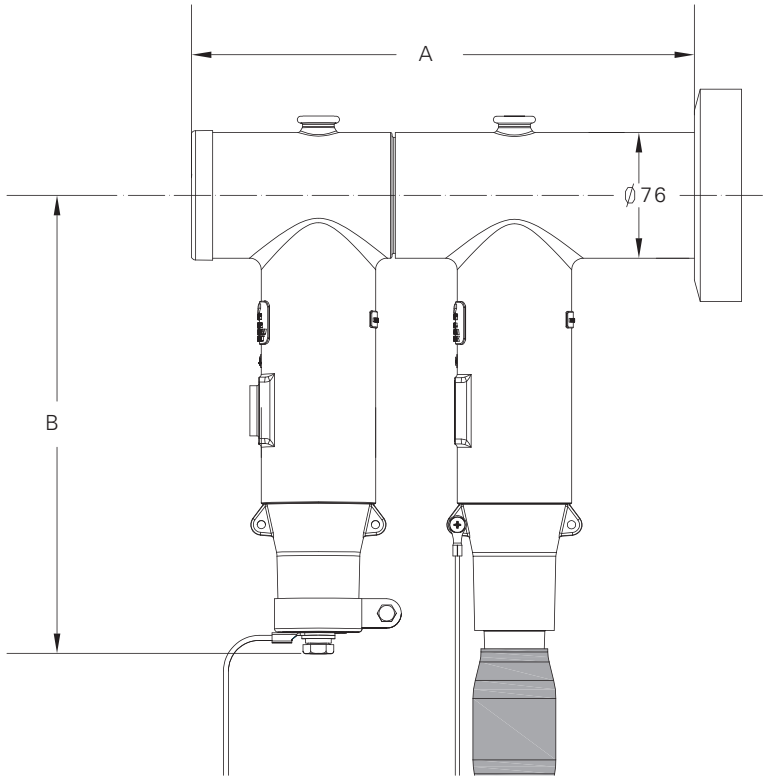

Part Number	A	B
DAI630TB1750CN DAI630TB1745CN	298	277
DAI630TBS1745CN	280	221
DAI630TBS17453J	280	221

Fully Shielded Deadfront Surge Arrester for 20kV Grid System

Fully Shielded Deadfront Surge Arrester for 20kV Grid System

The 26/34kV Deadfront Surge Arrester combines metal (zinc) oxide varistor technology in a premolded rubber Bushing Tee to provide overvoltage system protection in an insulated, fully shielded, submersible, deadfront device.

The arrester housing interface conforms to Cooper 24/36kV bushing tee specification. The arrester housing is molded of EPDM insulating rubber, which provides deadfront safety in a transformer or cabinet.The deadfront Surge Arresters are used on underground systems in transformerand entry cabinets, vaults, switching enclosuresand other installations to provide shielded deadfront arrester protection.

Standards

• The 26/34kV Deadfront Surge Arrester complies with the latest revisions of IEC 60099-4 Metal Oxide surge arresters without gaps for A.C. systems.

Operating Conditions

- Ambient temperature: -40℃~+65℃
- Power Frequency: 48~62Hz
- The voltage between arrester terminals should not exceed the MCOV

Electrical Ratings

Description	Unit	34/89kv Fully Shielded Deadfront Surge Arrester	26/69kv Fully Shielded Deadfront Surge Arrester
Part number		DAI630TB3489CN	DAI630TB2669CN
Nominal discharge current	kA	5kA	5kA
Rated voltage	(r.m.s) kV	34	26
Lighting impulse residual voltage	kV peak	≤89	≤69
MCOV	(r.m.s) kV	27.2	20.8
DC 1mA reference voltage test	kV	≥ 4 8	≥ 3 6 . 8
20 current surges of 150A crest for 2ms rectangular wave duration	A	150	150
High-current, 4/10μs short-duration discharge	kA	65	65
System		Directly Earthed	Indirectly Earthed

IEC Separable Connector

Fully Shielded Deadfront Surge Arrester for 20kV Grid System

Ordering Information

Fully Shielded Deadfront Surge Arrester for 20kV Grid System

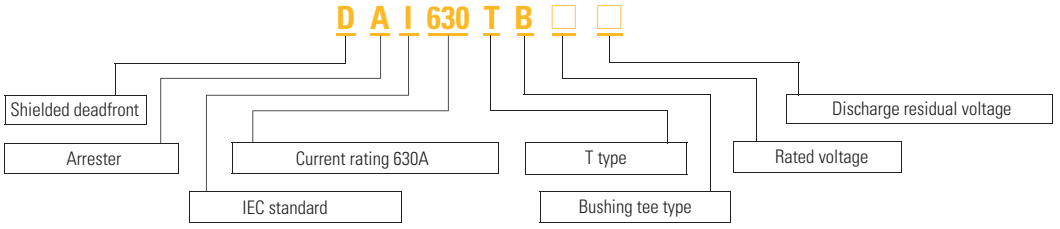

Packing Information

- Arrester Body
- Rod
- Silicone Grease
- Wiper
- Installation Manual

Customer Instructions

Preventive test shall be applied to surge arrester before energized or after 1 year running.

Test items as below:

- DC 1mA reference voltage. Both end of the surge arrester applies DC voltage, when the current flows the arrester stabilize at 1mA, the voltage displayed should not less than 95% of the value give out by the manufacture.
- Leakage current test: Applies 0.75 times of the DC 1mA reference voltage on both end of the surge arrester, the current flows the arrester measured shall not bigger than 50μA.
- AC Withstand test and discharge test are forbidden.

Dimensional Information

(all dimensions are in mm)

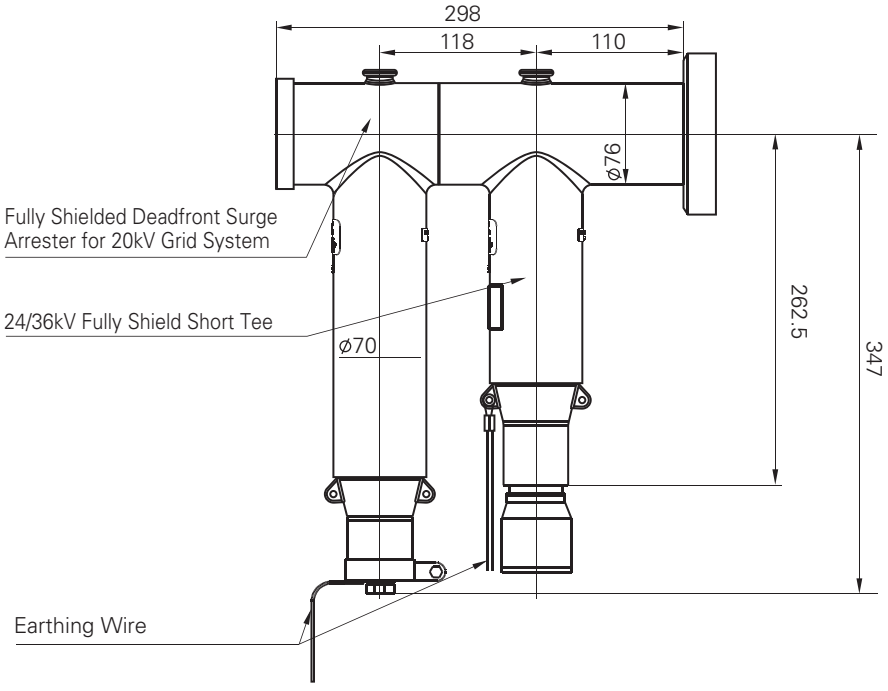

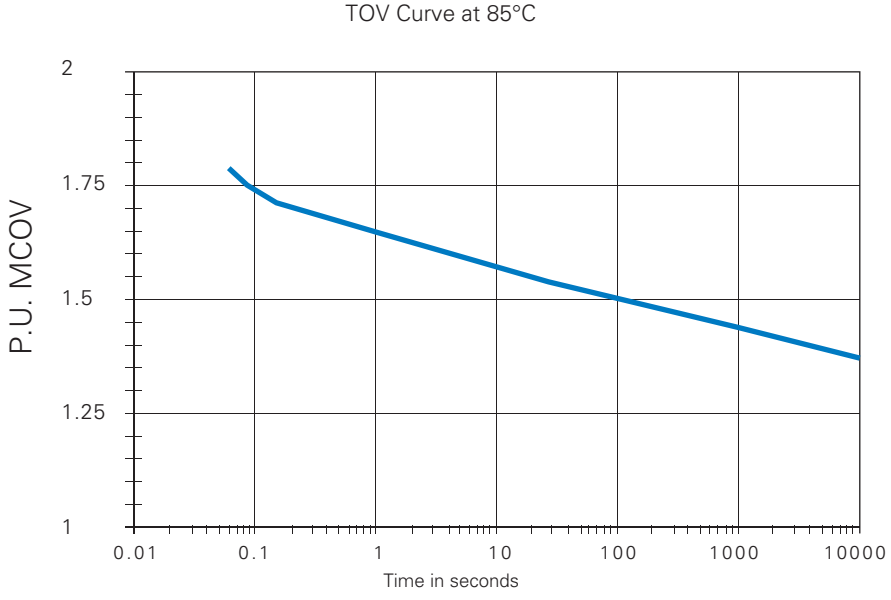

IEC Separable Connector

Fully Shielded Deadfront Surge Arrester for 35kV Grid System

45/51kV Fully Shielded Deadfront Surge Arrester

45/51kV Fully Shielded Deadfront Surge Arrester

The 45/51kV deadfront surge arrester combines metal (zinc) oxide varistor technology in a premolded rubber Bushing Tee to provide overvoltage system protection in an insulated, fully shielded, submersible, deadfront device.

The arrester housing interface conforms to Cooper 42kV Bushing Tee Specification. The arrester housing is molded of EPDM insulating rubber, which provides deadfront safety in a transformer or cabinet.45/51kV Deadfront Surge Arresters are used on underground systems in transformerand entry cabinets, vaults, switching enclosuresand other installations to provide shielded deadfront arrester protection.

Standards

- The 45/51kV Deadfront Surge Arrester complies with the latest revisions of IEC 60099-4 Metal Oxide surge arresters without gaps for A.C. systems.

Operating Conditions

- Ambient temperature: -40℃~+65℃
- Power Frequency: 48~62Hz
- The voltage between arrester terminals should not exceed the MCOV

Electrical Ratings

Description	Unit	45/127kv Fully Shielded Deadfront Surge Arrester	51/134kv Fully Shielded Deadfront Surge Arrester
Part number		DAI1250TB45127	DAI1250TB51134
Nominal discharge current	kA	10kA	10kA
Rated voltage	(r.m.s) kV	45	51
Lighting impulse residual voltage	kV peak	⩽127	⩽134
MCOV	(r.m.s) kV	36.0	40.8
DC 1mA reference voltage test	kV	⩾ 64.5	⩾73
20 current surges of 150A crest for 2ms rectangular wave duration	A	400	400
High-current, 4/10μs short-duration discharge	kA	100	100
System		Directly Earthed	Indirectly Earthed

Packing Information

- Arrester Body
- Rod
- Silicone Grease
- Wiper
- Installation Manual

Customer Instructions

Preventive test shall be applied to surge arrester before energized or after 1 year running.

Test items as below:

- DC 1mA reference voltage. Both end of the surge arrester applies DC voltage, when the current flows the arrester stabilize at 1mA, the voltage displayed should not less than 95% of the value give out by the manufacture.。
- Leakage current test: Applies 0.75 times of the DC 1mA reference voltage on both end of the surge arrester, the current flows the arrester measured shall not bigger than 50μA.
- AC Withstand test and discharge test are forbidden.

Dimensional Information

(all dimensions are in mm)

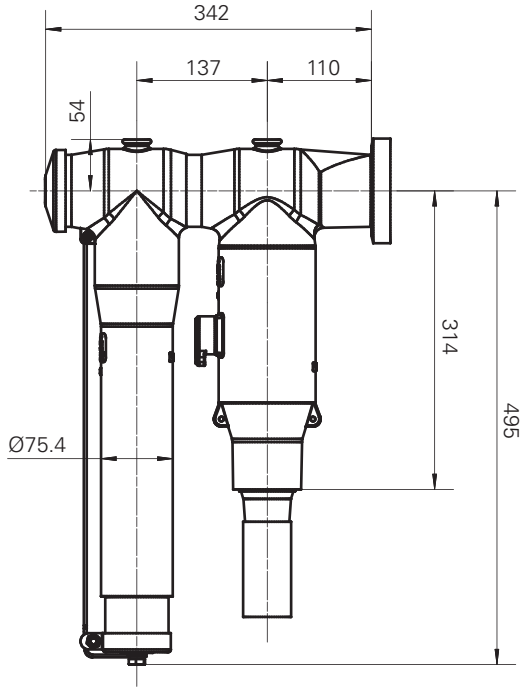

TOV Curve at 85°C

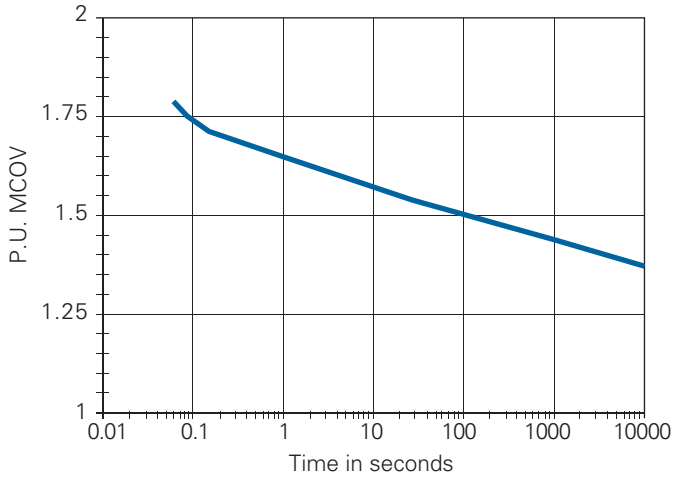

Coldshrink Trifurcation Kit for 3-core Cable

Catalog Number

Description	Part Number	Cable Cross Section（mm²）
8.7/15kV coldshrink trifurcation kit for 3-core cable（ordinary type）	SAK617CS01	25-50
	SAK617CS02	70-150
	SAK617CS03	185-400
	SAK617CS04	500-630
8.7/15kV coldshrink trifurcation kit for 3-core cable（long extension type）	SAK617CS21	25-50
	SAK617CS22	70-150
	SAK617CS23	185-400
	SAK617CS24	500-630
12/20kV Coldshrink trifurcation kit for 3-core cable（ordinary type）	SAK624CS01	35-70
	SAK624CS02	95-185
	SAK624CS03	240-400
	SAK624CS04	500-630
12/20kV Coldshrink trifurcation kit for 3-core cable（long extension type）	SAK624CS21	35-70
	SAK624CS22	95-185
	SAK624CS23	240-400
	SAK624CS24	500-630
18/30kV Coldshrink trifurcation kit for 3-core cable（ordinary type）	SAK636CS01	35-70
	SAK636CS02	95-185
	SAK636CS03	240-400
	SAK636CS04	500-630
18/30kV Coldshrink trifurcation kit for 3-core cable（long extension type）	SAK636CS21	35-70
	SAK636CS22	95-185
	SAK636CS23	240-400
	SAK636CS24	500-630
26/35kV Coldshrink trifurcation kit for 3-core cable（ordinary type）	SAK640CS01	25-50
	SAK640CS02	70-120
	SAK640CS03	150-240
	SAK640CS04	300-500
	SAK640CS05	630-800
26/35kV Coldshrink trifurcation kit for 3-core cable（long extension type）	SAK640CS21	25-50
	SAK640CS22	70-120
	SAK640CS23	150-240
	SAK640CS24	300-500
	SAK640CS25	630-800

Note: For separable connectors. ordinary type with 3 pieces of tube inside and long extension type with 6 pieces of tube.

Customer Reference List

国家电网 STATE GRID

中国南方电网 CHINA SOUTHERN POWER GRID

澳電 cem

Enel

TENAGA NASIONAL Better. Brighter.

KEPCO

endesa

Schneider Electric

ORMAZABAL 欧玛嘉宝 专注中压

EATON Powering Business Worldwide

天灵电器

華鵬變壓器 HUAPENG TRANSFORMER

大全集团 DAQO GROUP

置信电气

TGOOD 特锐德

B&D TRANSFORMER Simply Reliable

中广核 CGN

中泰化学 ZHONGTAI CHEMICAL

MTR港鐵

CMEC

At Eaton, we make what matters work. Our energy-efficient solutions help customers effectively manage electrical, hydraulic and mechanical power more reliably, safely and sustainably. We are dedicated to improving the quality of life and the environment through the use of power management technologies and services. Eaton employs 100,000 people worldwide, and sells products to customers in more than 175 countries. Eaton generated sales of $21.6 billion in 2018. For more information, **visit Eaton.com**.

For more information about the group, **visit Eaton.com.**
For more information about Eaton China, **visit: www.eaton.com.cn**

Eaton Corporation
No.3, Lane 280, Linhong Road,
Changning District,
Shanghai, China 200335

Cooper Electronic Technologies
(Shanghai) Co.,Ltd.
D-2,Building,Xinfa Industrial
Park,No.38 Dong Sheng
Road,Heqing Pudong, Shanghai

© 2019 Eaton Corporation
All Rights Reserved
Printed in China
August 2019

Eaton is a registered trademark
of Eaton Corporation.

All trademarks are property of their
respective owners.

Powering Business Worldwide